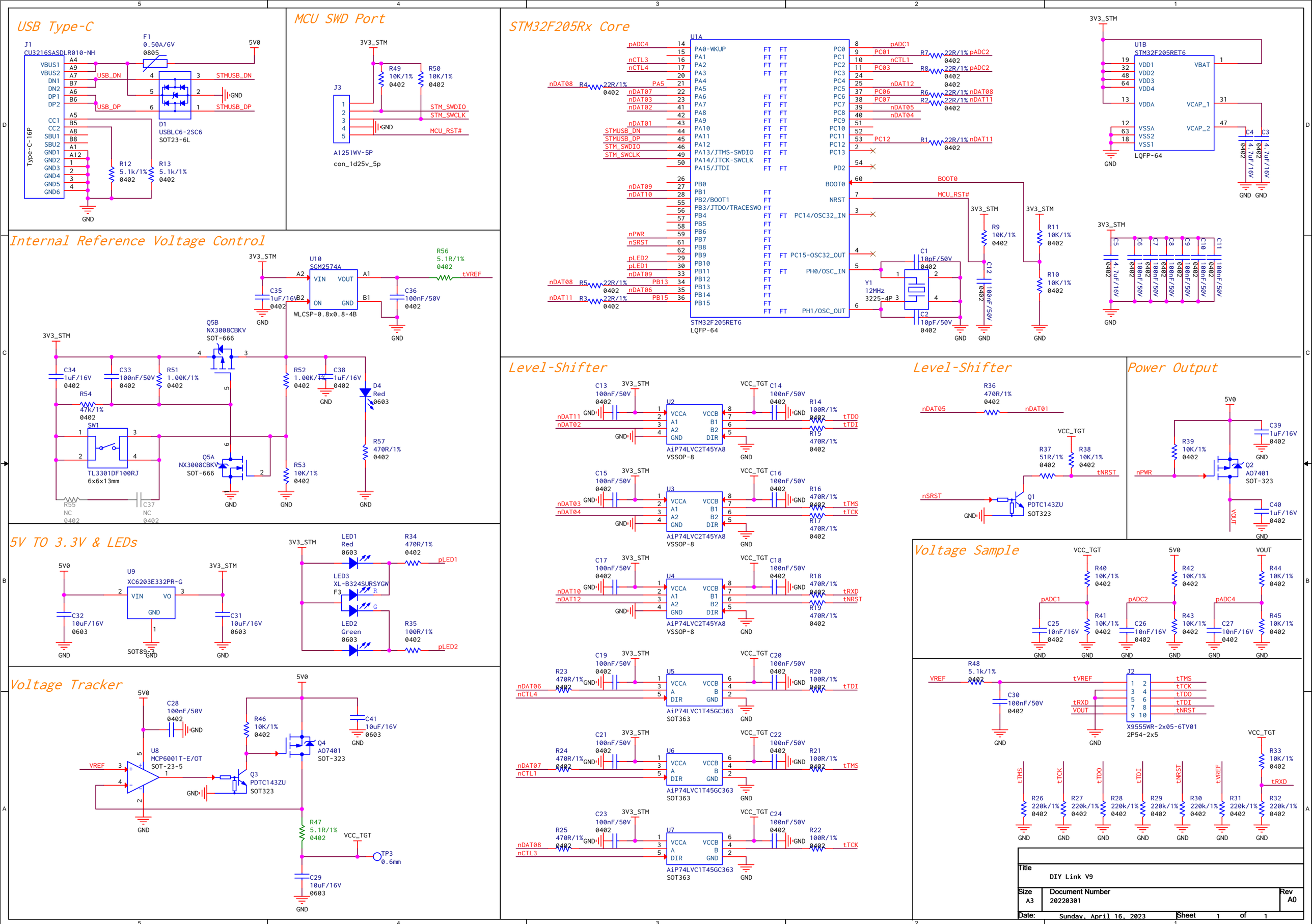
USB Type-C
MCU SWD Port
STM32F205Rx Core
Internal Reference Voltage Control
5V TO 3.3V & LEDs
Voltage Tracker
Level-Shifter
Level-Shifter
Power Output
Voltage Sample
Title
DIY Link V9
Size
A3
Document Number
20220301
Rev
A0
Date:
Sunday, April 16, 2023
Sheet
1
of
1