Power IN And ON/OFF Control

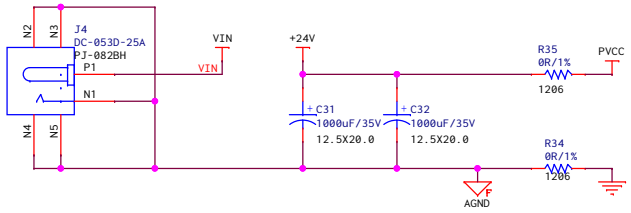

Power ON & LVP

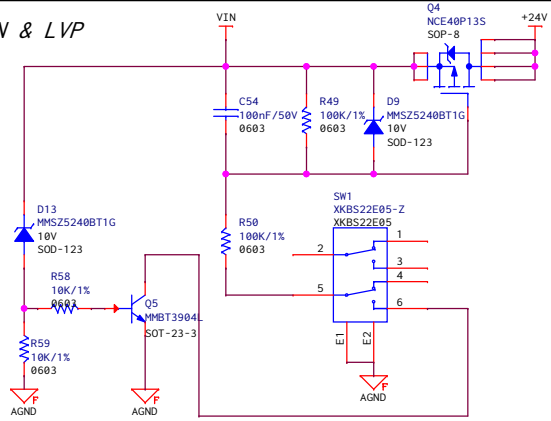

Analog +5V And -5V SUPPLY

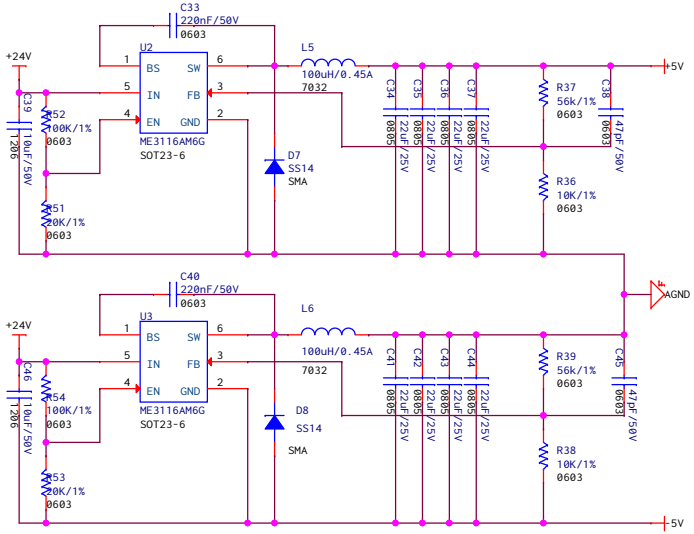

Audio Input And Pre-Amp

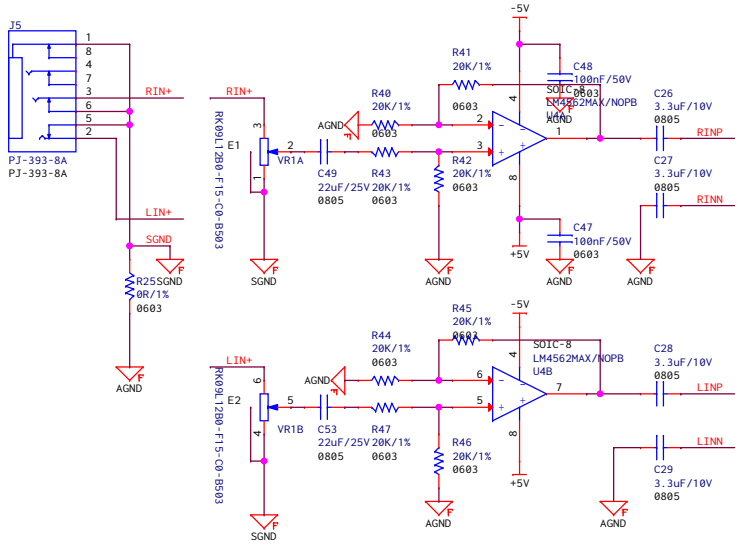

Power ON&OFF POP Suppression

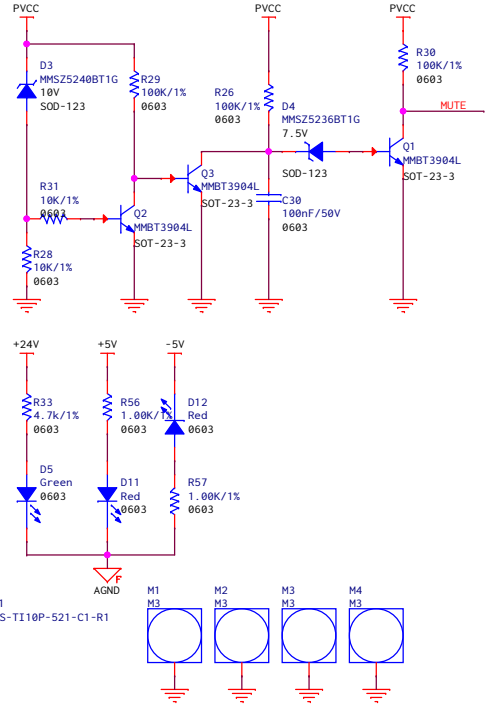

TPA3116

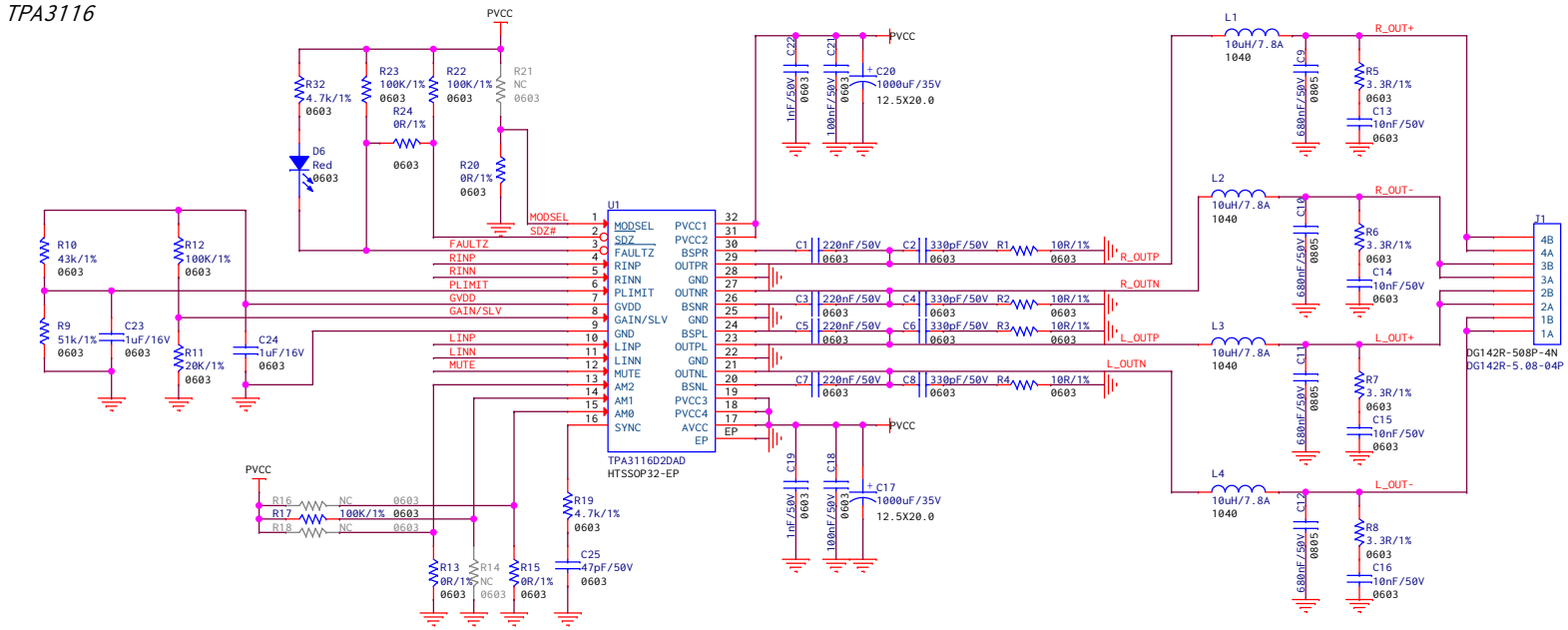

Title	TPA311x-EVAL	
Size A3	Document Number 20220301	Rev A0
Date: Tuesday, June 14, 2022	Sheet 1 of 1	