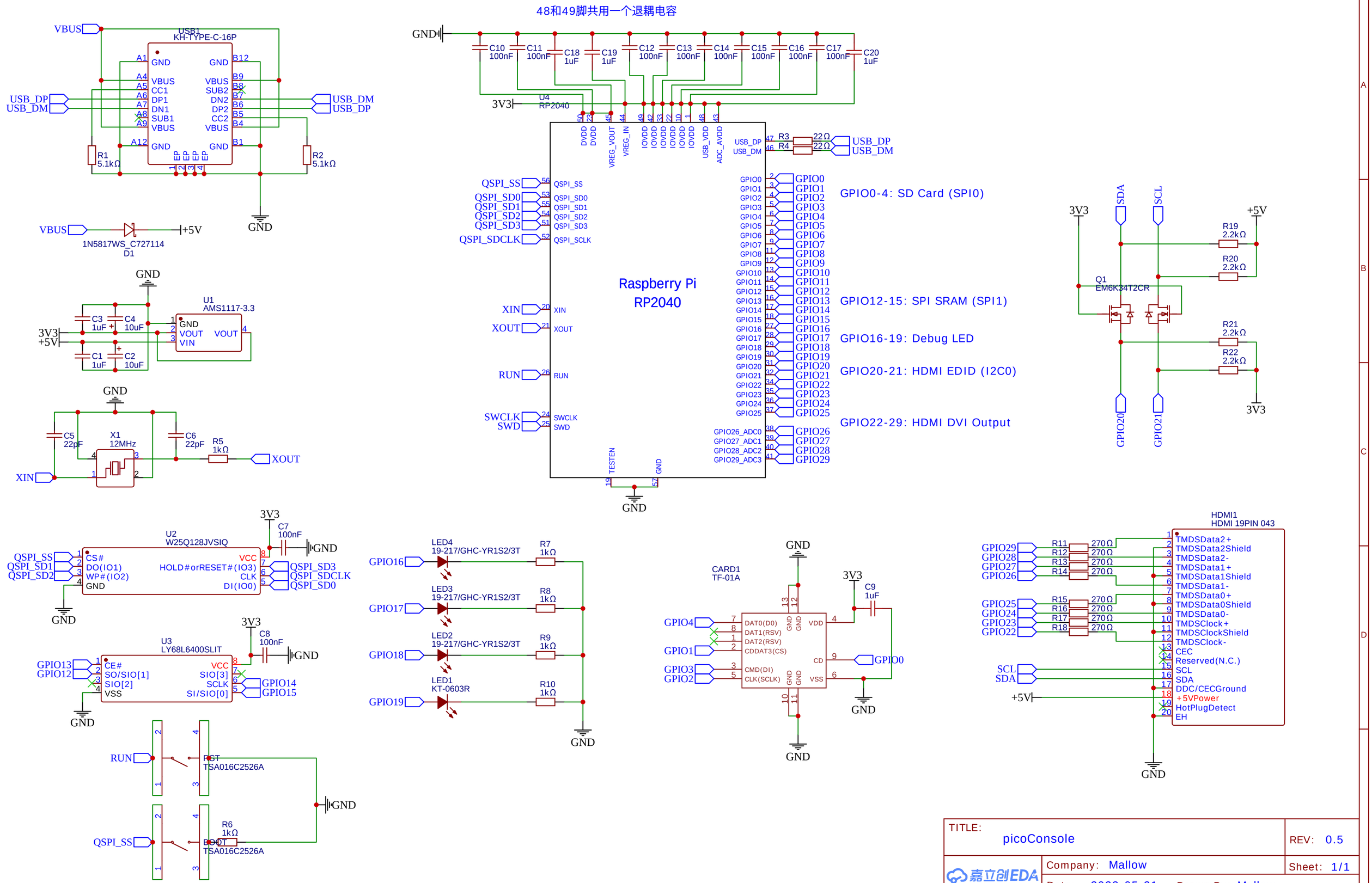

TITLE: picoConsole	REV: 0.5
嘉立创EDA Company: Mallow	Sheet: 1/1
Date: 2023-05-21 Drawn By: Mallow	