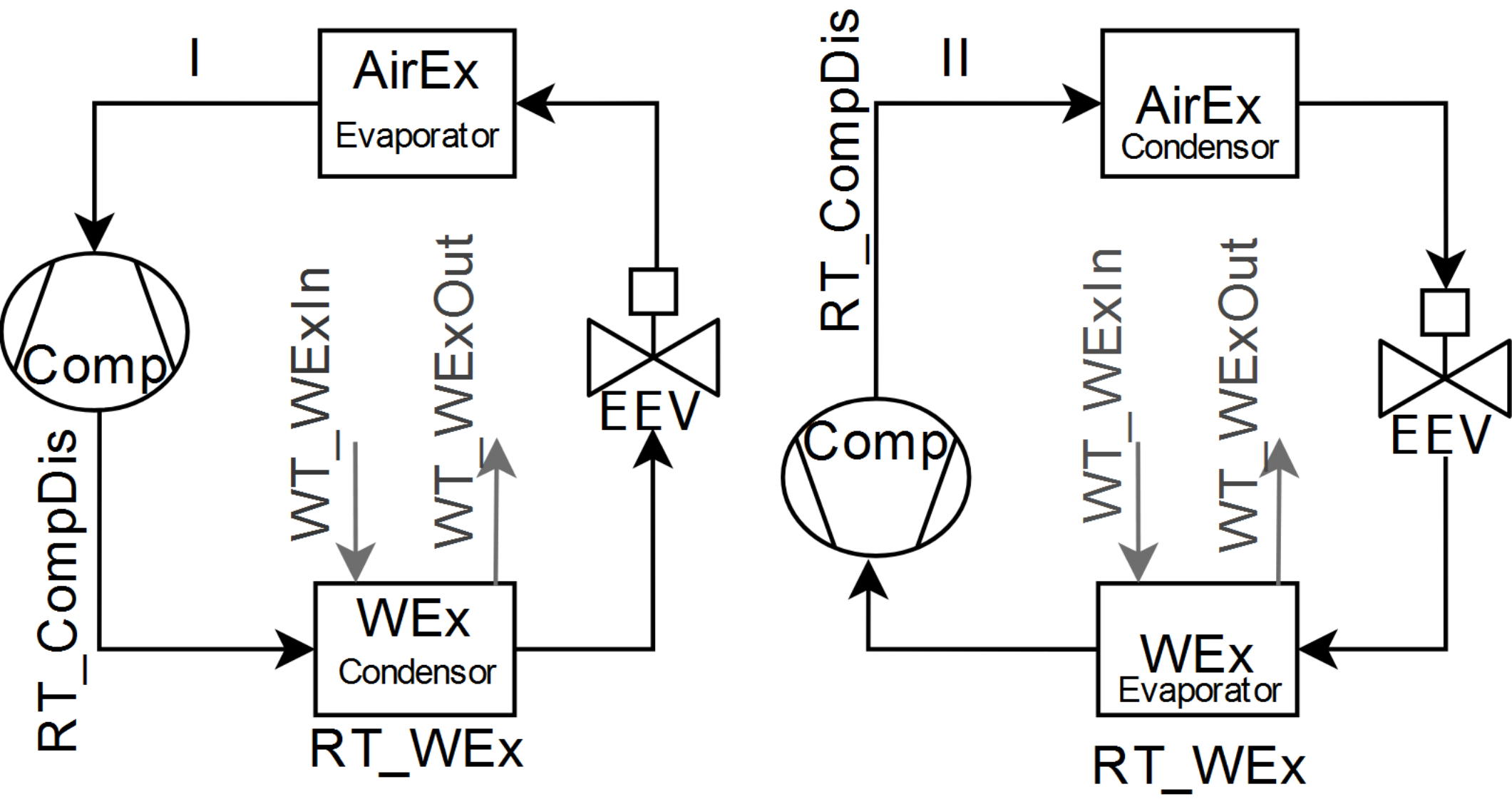
I
AirEx
Evaporator
Comp
RT_CompDis
WT_WExIn
WT_WExOut
EEV
WEx
Condensor
RT_WEx
II
RT_CompDis
AirEx
Condensor
Comp
WT_WExIn
WT_WExOut
EEV
WEx
Evaporator
RT_WEx