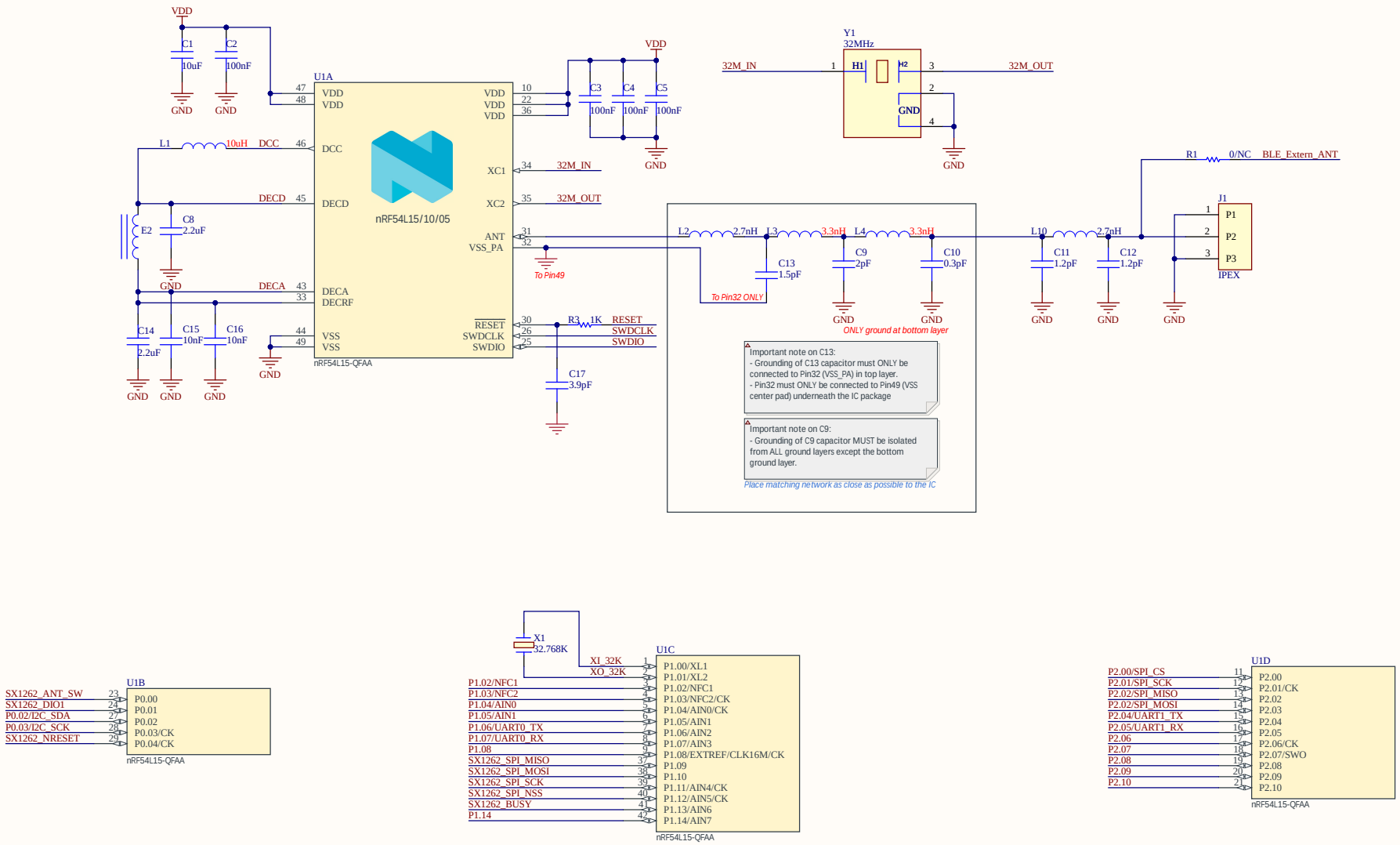

Title			
Engineer: *		RAK	RAKwireless Technology Co., Ltd.
Size: A3	Revision:		
Date: 2026/1/4		Sheet 1	of 3

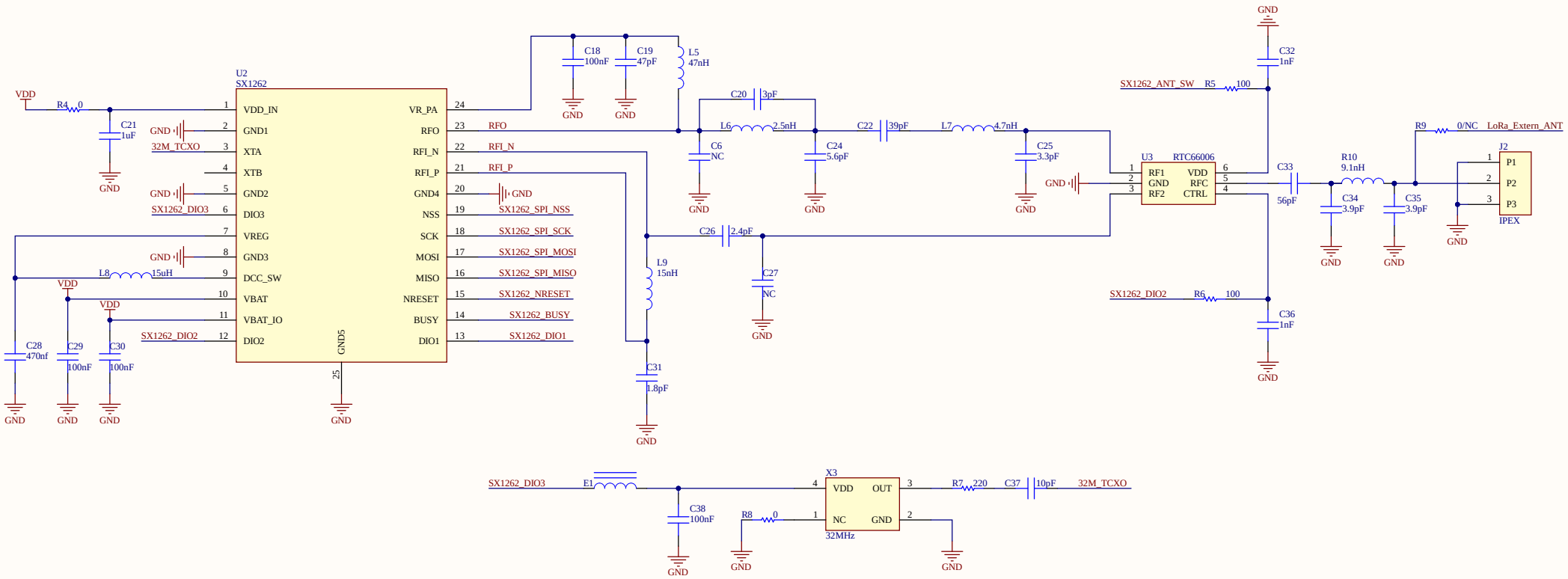

SX1262

Title			
Engineer: *		RAK	RAKwireless Technology Co., Ltd.
Size: A3	Revision:		
Date: 2026/1/4		Sheet 2	of 3

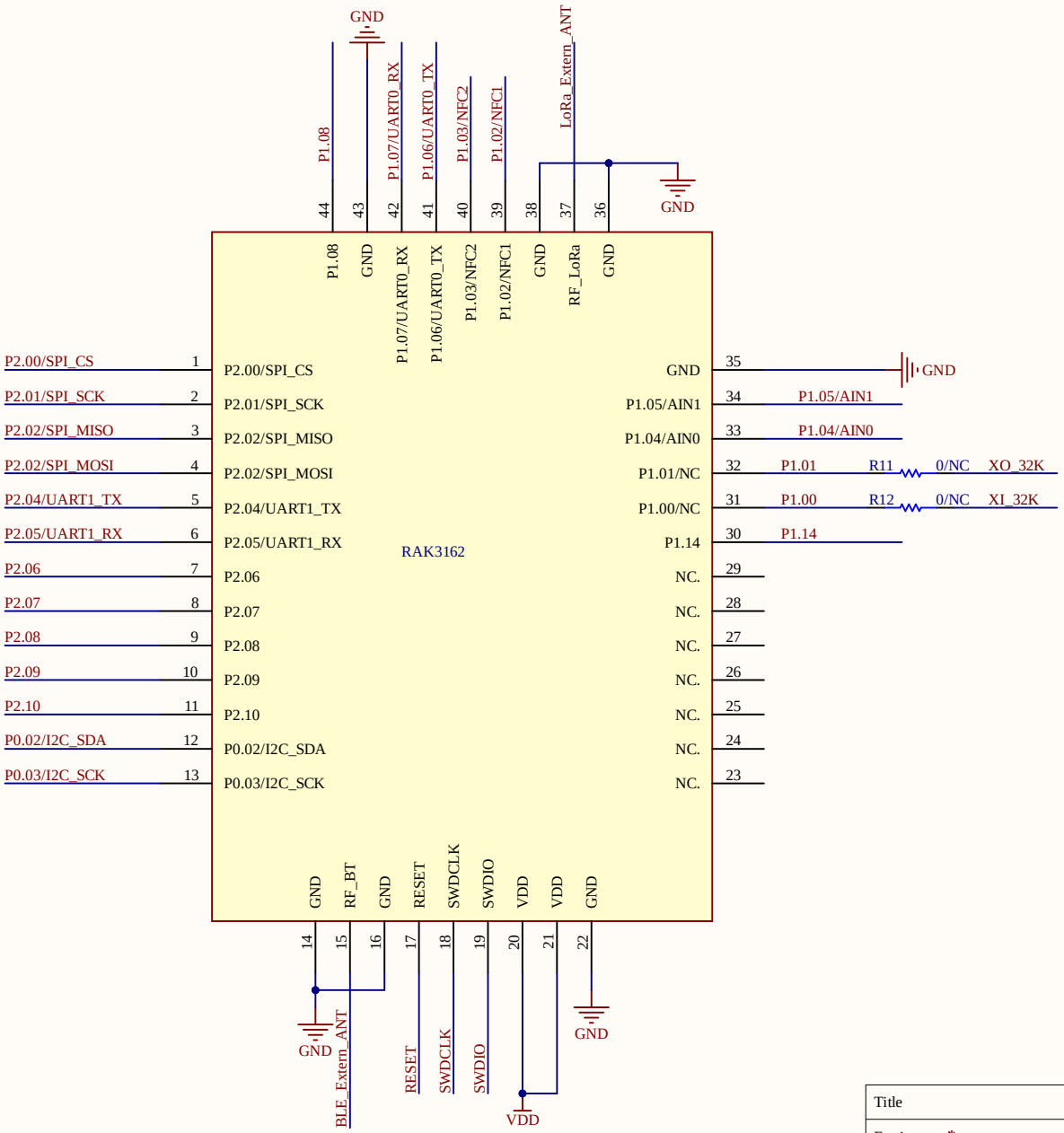

Title	
Engineer: *	RAK RAKwireless Technology Co., Ltd.
Size: A4 Revision:	
Date: 2026/1/4	Sheet 3 of 3