Pump Power

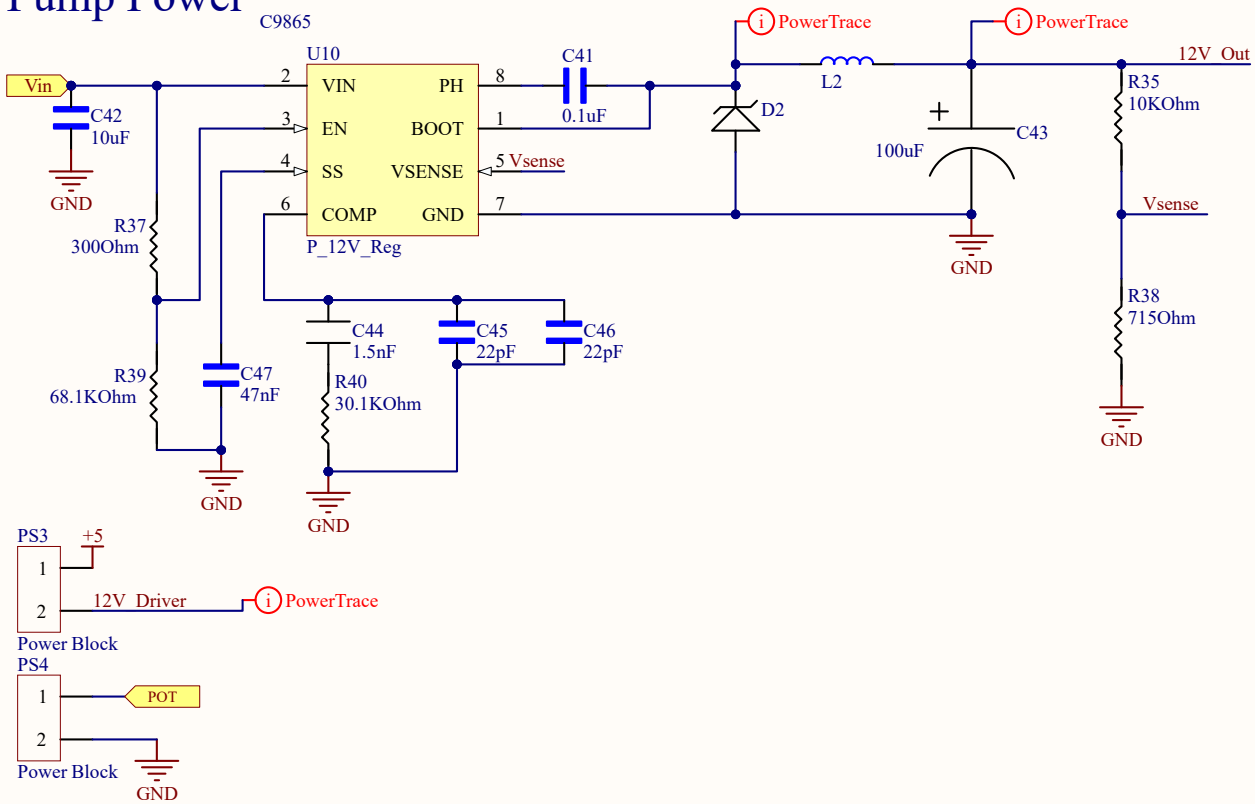

Fan Headers

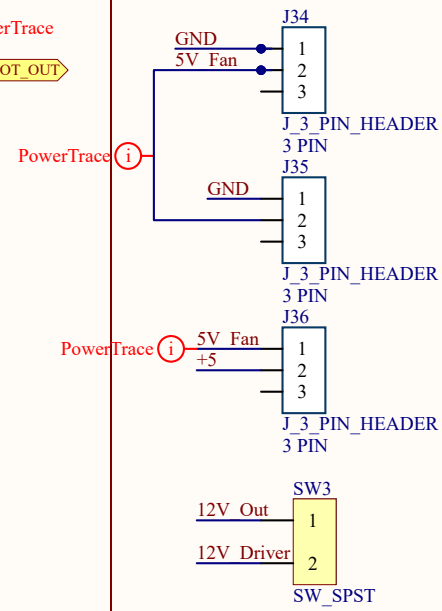

Title	XPOD-V4.0.0_POWER-SCHEMATIC	
Size: A	Number: X4.0.0_POW-SCH1.0	Revision: R1.0
Date: 11/09/2023		Sheet 1 of 4
File: C:\Users\..\Power.SchDoc		Drawn By: RYLEE BEACH

AT MEGA 2560 Headers

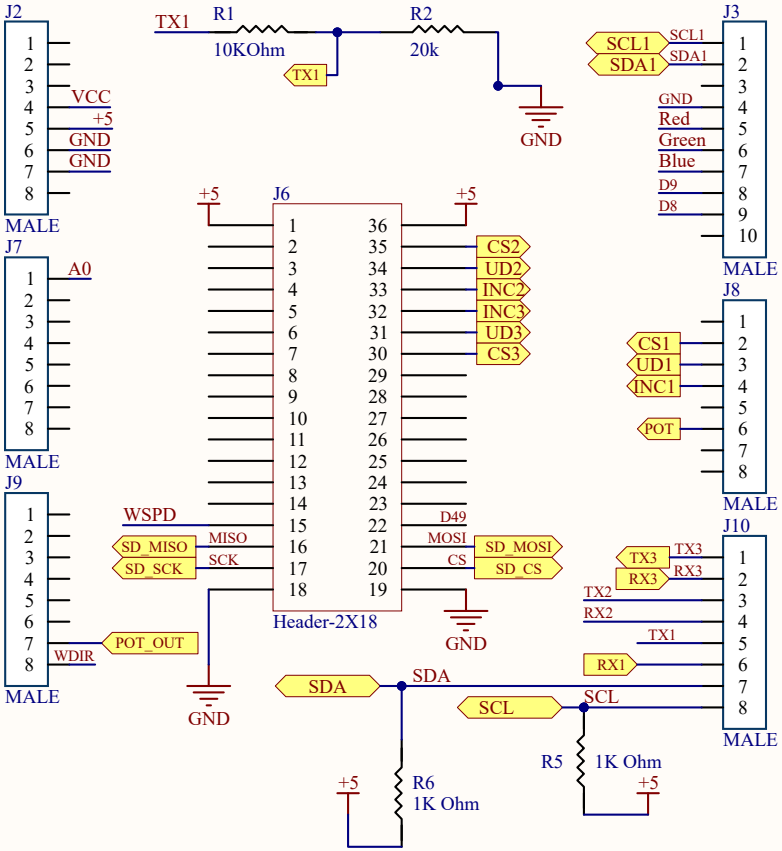

LoRa/cell Header

MET Station

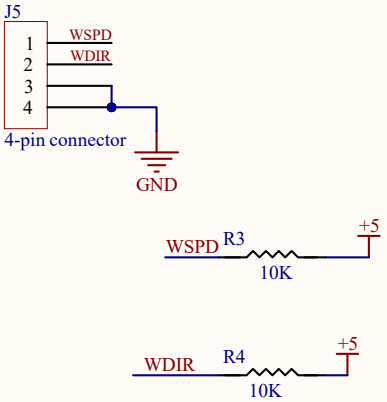

Power

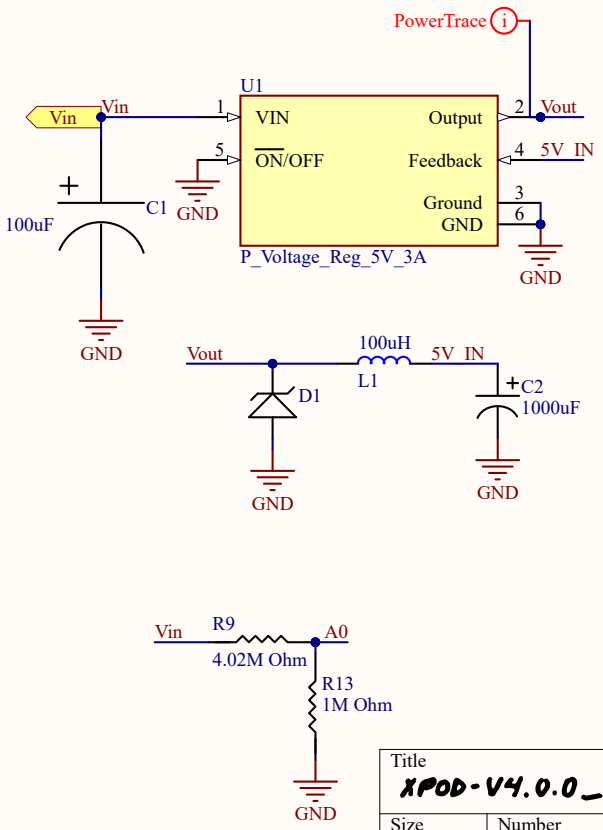

GPS/RTC Headers

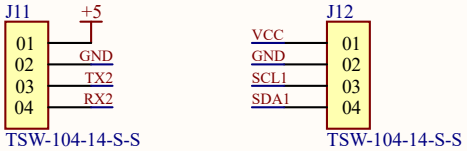

Status LEDS

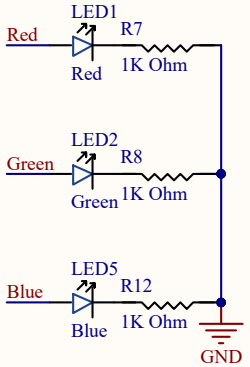

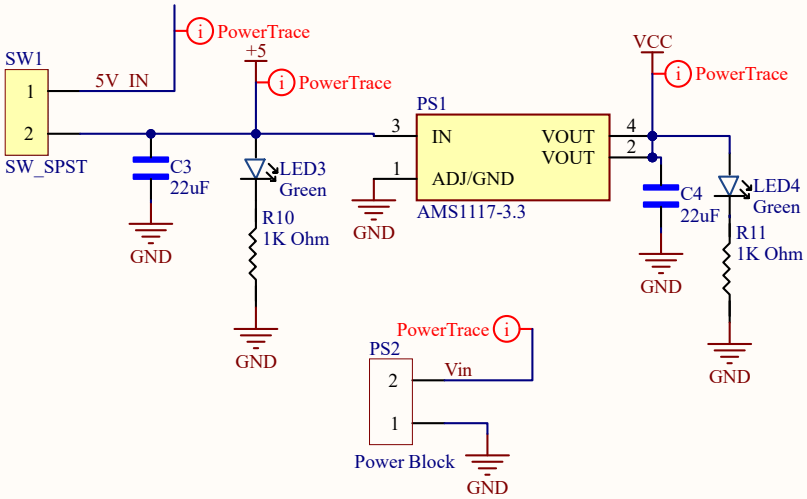

Title: XPOD-V4.0.0_HEADER-SCHEMATIC		
Size: A	Number: X4.0.0_HEAD-SCH1.0	Revision: R1.0
Date: 11/09/2023		Sheet 2 of 4
File: C:\Users\..\Headers.SchDoc		Drawn By: RYLEE BEACH

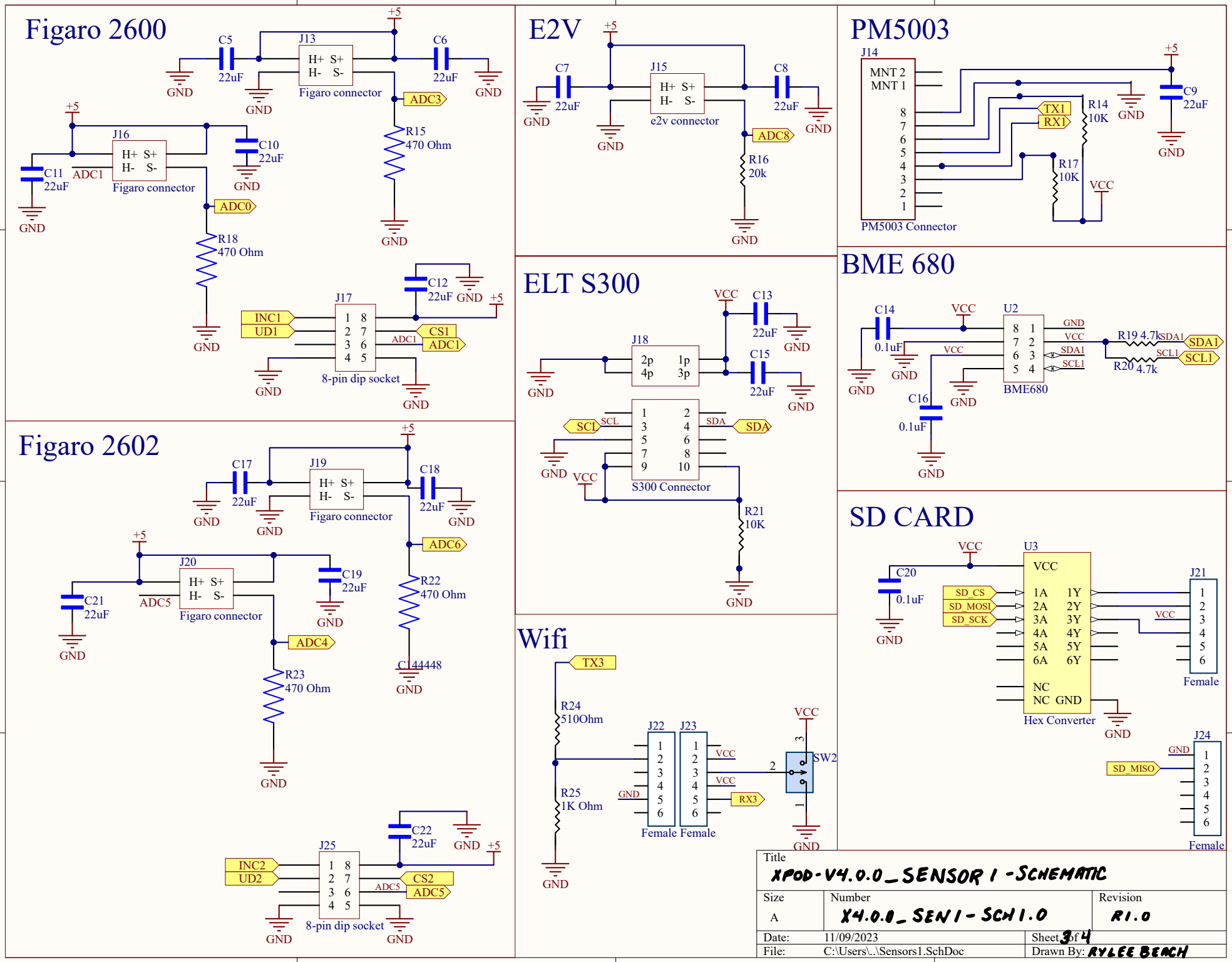
Figaro 2600
C5
22uF
J13
H+ S+
H- S-
Figaro connector
C6
22uF
ADC3
R15
470 Ohm
J16
C10
22uF
C11
22uF
ADC1
ADC0
R18
470 Ohm
C12
22uF
J17
INC1
UD1
CS1
ADC1
8-pin dip socket
E2V
C7
22uF
J15
e2v connector
C8
22uF
ADC8
R16
20k
PM5003
J14
MNT 2
MNT 1
TX1
RX1
R14
10K
R17
10K
C9
22uF
VCC
PM5003 Connector
ELT S300
C13
22uF
J18
C15
22uF
SCL
SDA
S300 Connector
R21
10K
BME 680
C14
0.1uF
U2
GND
VCC
SDA1
SCL1
R19 4.7k
R20 4.7k
BME680
C16
0.1uF
Figaro 2602
C17
22uF
J19
C18
22uF
ADC6
J20
C19
22uF
C21
22uF
ADC5
ADC4
R22
470 Ohm
R23
470 Ohm
C144448
C22
22uF
J25
INC2
UD2
CS2
ADC5
8-pin dip socket
Wifi
TX3
R24
510Ohm
R25
1K Ohm
J22
J23
Female Female
RX3
SW2
SD CARD
C20
0.1uF
U3
SD_CS
SD_MOSI
SD_SCK
VCC
1A 1Y
2A 2Y
3A 3Y
4A 4Y
5A 5Y
6A 6Y
NC
NC GND
Hex Converter
J21
Female
J24
SD_MISO
Title
XPOD-V4.0.0_SENSOR 1 -SCHEMATIC
Size
A
Number
X4.0.0_SEN1-SCH1.0
Revision
R1.0
Date: 11/09/2023
Sheet 3 of 4
File: C:\Users\..\Sensors1.SchDoc
Drawn By: RYLEE BEACH

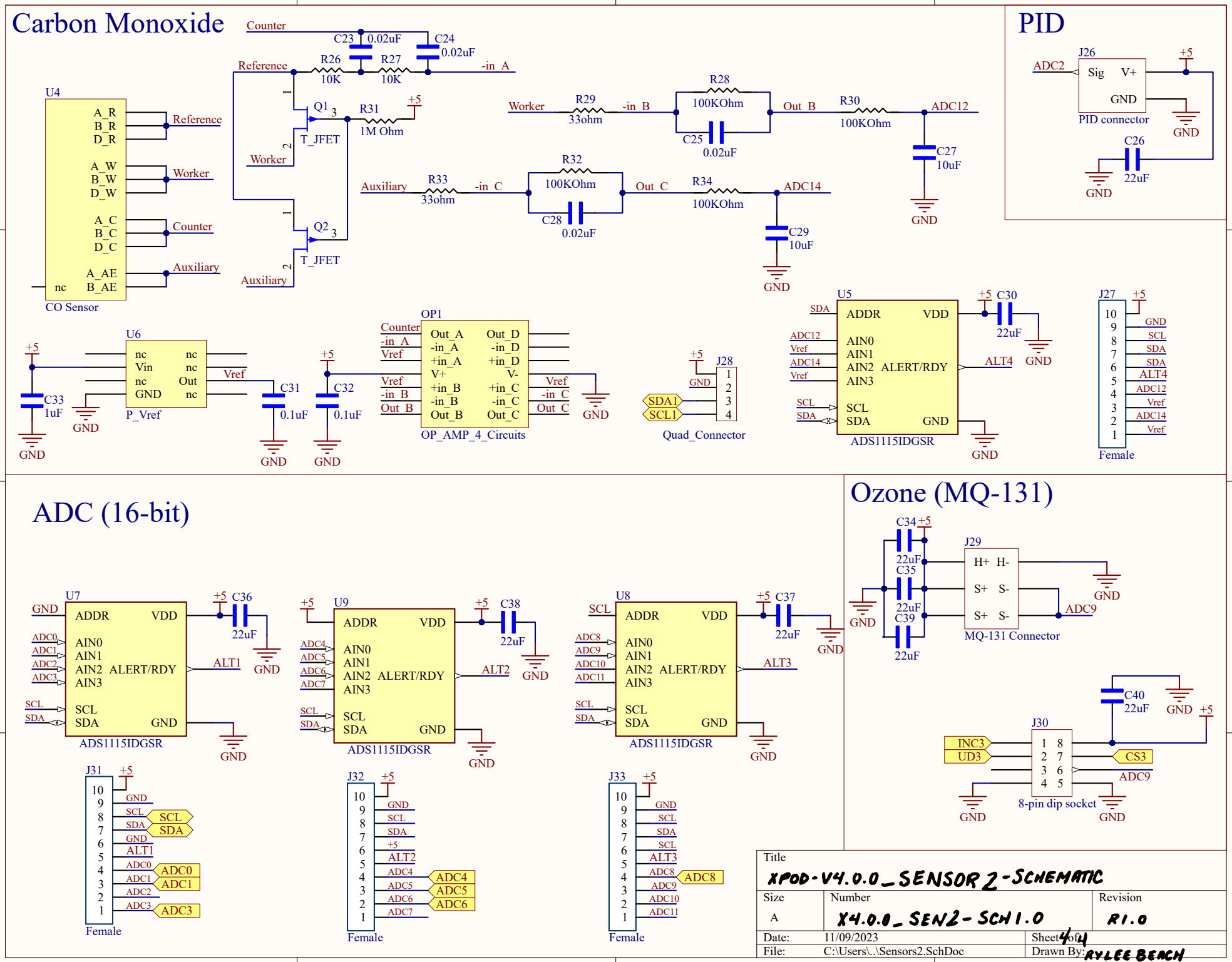
Carbon Monoxide
U4
A_R
B_R
D_R
A_W
B_W
D_W
A_C
B_C
D_C
A_AE
B_AE
nc
Reference
Worker
Counter
Auxiliary
CO Sensor
Counter
C23 0.02uF
C24 0.02uF
R26 10K
R27 10K
-in_A
Reference
Q1
T_JFET
R31 1M Ohm
+5
Worker
Q2
T_JFET
Auxiliary
Worker
R29 33ohm
-in_B
R28 100KOhm
C25 0.02uF
Out_B
R30 100KOhm
ADC12
C27 10uF
GND
Auxiliary
R33 33ohm
-in_C
R32 100KOhm
C28 0.02uF
Out_C
R34 100KOhm
ADC14
C29 10uF
GND
PID
J26
ADC2
Sig
V+
GND
PID connector
+5
GND
C26 22uF
GND
U6
nc
Vin
nc
GND
nc
nc
Out
nc
P_Vref
Vref
+5
C33 1uF
GND
C31 0.1uF
GND
+5
C32 0.1uF
GND
OP1
Counter
-in_A
Vref
Vref
-in_B
Out_B
Out_A
-in_A
+in_A
V+
+in_B
-in_B
Out_B
Out_D
-in_D
+in_D
V-
+in_C
-in_C
Out_C
Vref
-in_C
Out_C
OP_AMP_4_Circuits
GND
+5
J28
GND
SDA1
SCL1
Quad_Connector
U5
SDA
ADDR
VDD
ADC12
Vref
ADC14
Vref
AIN0
AIN1
AIN2
AIN3
ALERT/RDY
SCL
SDA
SCL
SDA
GND
ADS1115IDGSR
+5
C30 22uF
ALT4
GND
GND
J27
+5
10
9
8
7
6
5
4
3
2
1
GND
SCL
SDA
SDA
ALT4
ADC12
Vref
ADC14
Vref
Female
ADC (16-bit)
U7
GND
ADDR
VDD
ADC0
ADC1
ADC2
ADC3
AIN0
AIN1
AIN2
AIN3
ALERT/RDY
SCL
SDA
SCL
SDA
GND
ADS1115IDGSR
+5
C36 22uF
ALT1
GND
GND
U9
+5
ADDR
VDD
ADC4
ADC5
ADC6
ADC7
AIN0
AIN1
AIN2
AIN3
ALERT/RDY
SCL
SDA
SCL
SDA
GND
ADS1115IDGSR
+5
C38 22uF
ALT2
GND
GND
U8
SCL
ADDR
VDD
ADC8
ADC9
ADC10
ADC11
AIN0
AIN1
AIN2
AIN3
ALERT/RDY
SCL
SDA
SCL
SDA
GND
ADS1115IDGSR
+5
C37 22uF
ALT3
GND
GND
J31
+5
10
9
8
7
6
5
4
3
2
1
GND
SCL
SDA
GND
ALT1
ADC0
ADC1
ADC2
ADC3
SCL
SDA
ADC0
ADC1
ADC3
Female
J32
+5
10
9
8
7
6
5
4
3
2
1
GND
SCL
SDA
+5
ALT2
ADC4
ADC5
ADC6
ADC7
ADC4
ADC5
ADC6
Female
J33
+5
10
9
8
7
6
5
4
3
2
1
GND
SCL
SDA
SCL
ALT3
ADC8
ADC9
ADC10
ADC11
ADC8
Female
Ozone (MQ-131)
C34 +5
22uF
C35
22uF
C39
22uF
GND
J29
H+
H-
S+
S-
S+
S-
GND
ADC9
MQ-131 Connector
C40 22uF
GND
+5
J30
INC3
UD3
1 8
2 7
3 6
4 5
CS3
ADC9
8-pin dip socket
GND
GND
Title
XPOD-V4.0.0_SENSOR 2-SCHEMATIC
Size
A
Number
X4.0.0_SEN2-SCH1.0
Revision
R1.0
Date: 11/09/2023
Sheet 4 of 4
File: C:\Users\..\Sensors2.SchDoc
Drawn By: RYLEE BEACH