Engineering & Applied Science
UNIVERSITY OF COLORADO **BOULDER**

HAQ Lab
Hannigan Air Quality Lab

XPOD V6.0M1 Datasheet

Guide to an Air Quality Measurement Device for Remote Sensing

Compiled By Chiara Pesce 7/3/25

1. Table of Contents

2. XPOD Sensors and Modules ***2***

2.1 Present Sensors 2

2.2 Present Modules 2

2.3 Power Specifications 2

3. General Information ***3***

3.1 Quadstat Breakout 3

3.2 Additional Photos 4

4. Firmware ***5***

5. Updates from XPOD V5.4 ..... ***6***

5.1 Removed Modules 6

5.2 Power Updates 6

5.3 VOC Numbering 7

5.4 Jumper Switches 7

2. XPOD Sensors and Modules

2.1 Present Sensors

SENSOR NAME	FUNCTION	METHOD	LOGIC
ELT S-300-3V	Carbon Dioxide (CO_2)	Absorbance / NDIR	3.3V
BOSCH BME 680	Temperature, Pressure, Relative Humidity	MEMS, Diode, MOX	3.3V
MICS 2611	Ozone (O_3)	MOX	5V
FIGARO TGS 2600	Volatile Organic Compounds (VOC)	MOX	5V
FIGARO TGS 2602	Volatile Organic Compounds (VOC)	MOX	5V
MQ-4	Flammable Gas / Methane	MOX	5V
ALPHASENSE CO-B4	Carbon Monoxide (CO)	Electrolytic	5V
ALPHASENSE OX-B431	Ozone (O_3), Nitrogen Dioxide (NO_2)	Electrolytic	5V
ALPHASENSE NO2-B43F	Nitrogen Dioxide (NO_2)	Electrolytic	5V
ALPHASENSE NO-B4	Nitric Oxide (NO)	Electrolytic	5V

2.2 Present Modules

MODULE NAME	FUNCTION
ARDUINO MEGA	Microcontroller
ADAFRUIT DS3231 BREAKOUT	RTC (Clock)
SD SHIELD BREAKOUT	Micro SD Data Storage
QUADSTAT	Alphasense Sensor Housing
FAN	Airflow

2.3 Power Specifications

All XPOD versions should be run off 12V DC power at 2A. Modifications can be made for wall socket plug-ins or other DC power cables.

Figure 1: How to Properly Plug in a DC Power Cable

3. General Information

3.1 Quadstat Breakout

The Quadstat houses four Alphasense electrochemical sensors that target various gases such as Carbon Monoxide (CO), Nitric Oxide (NO), Nitrogen Dioxide (NO_2) and Ozone (O_3). The Quadstat can fit Alphasense A, B, C and D footprints. An example Layout is shown below (*Figure 8*) numbered from 1-4 in the order the data will display on the Micro SD card.

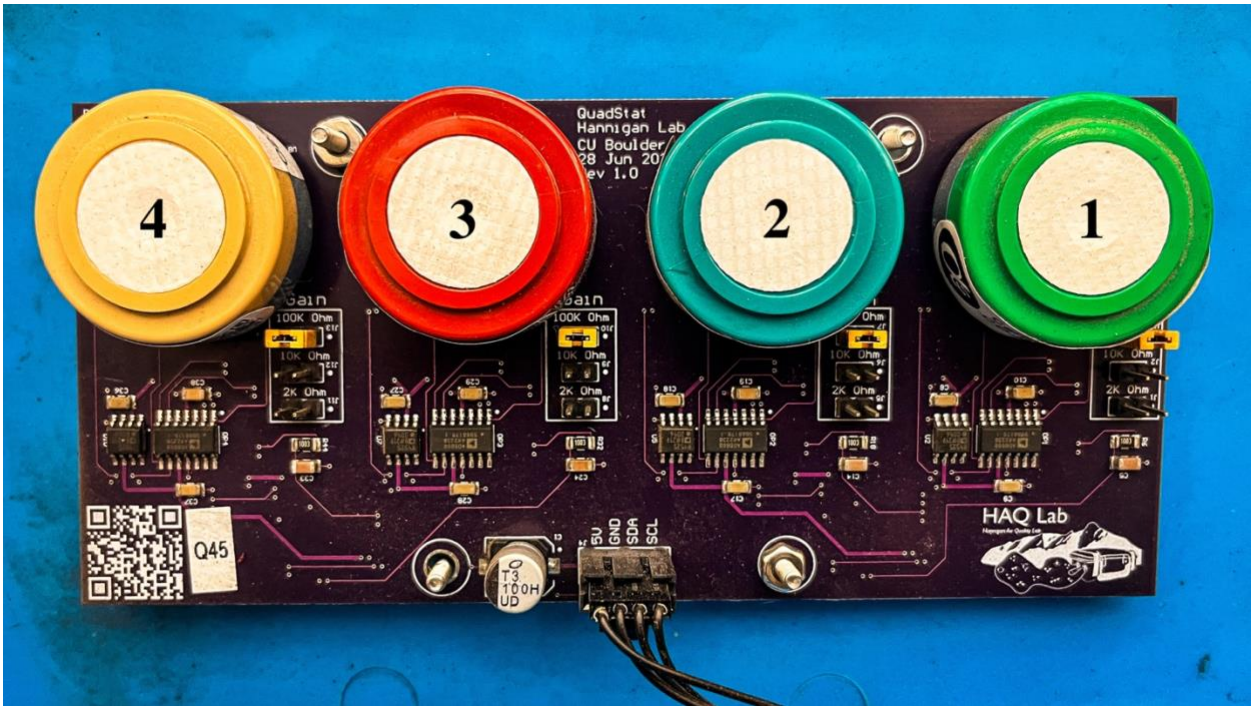

Figure 2: Quadstat Breakout Board with Numbered Sensors

When data is viewed on the SD card, each sensor will write two columns: "Auxiliary" and "Main". To use the data printed to the SD card, you must take the difference between the Auxiliary and Main channel values. An example that correlates with the Quadstat in Figure 8 is shown below.

SENSOR	1. Carbon Monoxide		2. Nitric Oxide		3. Nitrogen Dioxide		4. Ozone and Nitrogen Dioxide	
COLUMN	α1 Ch1	α1 Ch2	α1 Ch3	α1 Ch4	α2 Ch1	α2 Ch2	α2 Ch3	α2 Ch4
DATA	CO A	CO B	NO A	NO B	NO_2 A	NO_2 B	O_3 NO_2 A	O_3 NO_2 B

3.2 Additional Photos

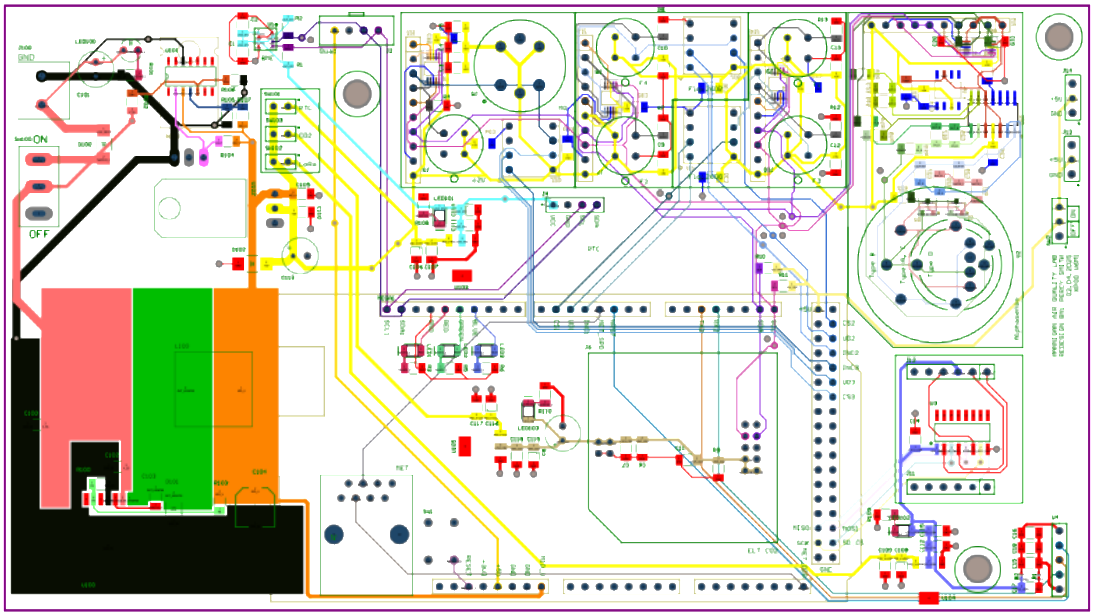

Figure 3: Altium Composite Displaying Colored Nets

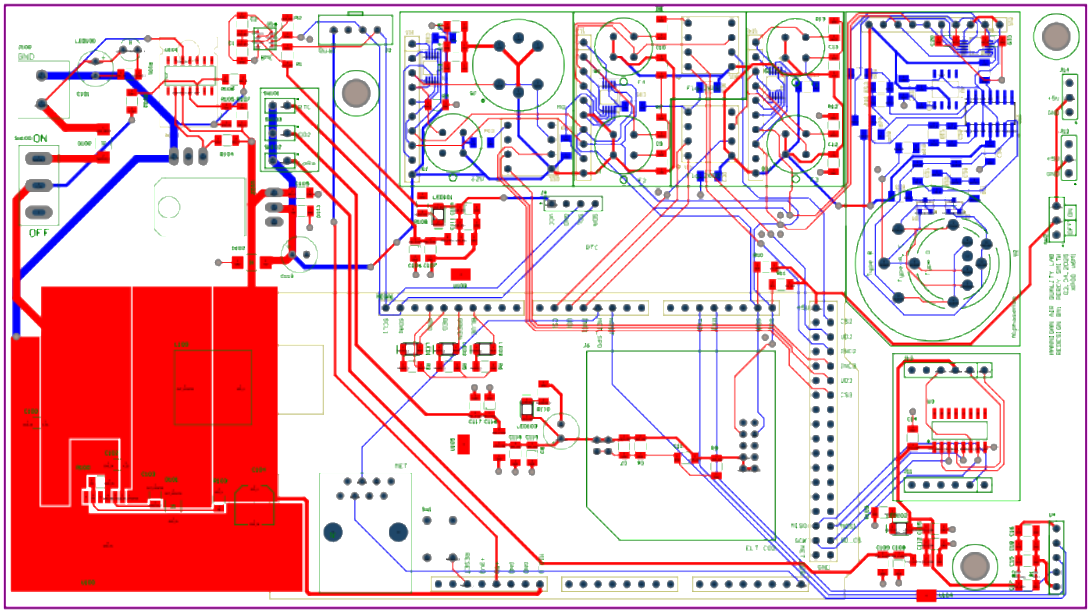

Figure 4: Altium Composite Displaying Top (Red) Traces and Bottom (Blue) Traces

4. Firmware

This section will cover the associated XPOD firmware. The current Firmware version is xpod_V3.2.3 which can be found in the HAQ Lab GitHub.

https://github.com/HanniganAirQuality

VERSION	NAME	PILOT	DATE	DESCRIPTION
V3.1.2	Initial Upload	Percy	7/10/24	Moving docs to central git.
V3.2.0	UTC Pilot	Percy	10/2/24	Fulfills feature request for UTC timestamps.
V3.2.1	EXT LED Mod	Percy	10/3/24	External LED support.
V3.2.2	Landscaping	Percy	10/4/24	Trims unused FW- Motor control, GPS, OPC.
V3.2.3	PCB LED Repair	Percy	10/18/24	Fixes LEDs on PCB and updates .h file.
V4.0.0	Plantower Repair	Percy	In Progress	

To utilize the V3.2 firmware, you need to:

1. **Move all un-zipped libraries into your Documents/Arduino/libraries folder** on your computer to ensure Arduino can compile with the appropriate libraries.
    a. On some versions of the code, you will get prompted to update certain libraries. Please decline, this may interfere with the current firmware version. If a library needs to be updated in a firmware update, it will be updated in the associated libraries folder.

2. Open the .ino file and wait for all associated .h and .cpp files to open.
    a. The .ino file is the main Arduino script. It has a setup (void setup ()) function the Arduino runs once, and a loop (void loop ()) function that will run until the Arduino loses power.

If using the XPOD V3.1.2 Firmware, associated headers can be found in the V3.1 folder under XPODV3.1.2_Headers.xlsx or referenced below.

[QS1_C1, QS1_C2, QS2_C1, QS2_C2, QS3_C1, QS3_C2, QS4_C1, QS4_C2, MET_spd, MET_dir, MQ, PM1.0_ENV, PM2.5_ENV, PM10.0_ENV, PM03um, PM10um, PM25um, PM50um]

In any XPOD Firmware version, to adjust which sensors used by the Arduino, change the associated #define statement in the xpod_node.h script to 1 (active) or 0 (inactive) and reupload firmware to the Arduino.

For XPOD V6.0M1, remember to set PMS_ENABLED to 0 since there is no Plantower.

Please ensure the Watchdog (#define THE_DAWG) is always set to 1 for the CO2 sensor to function properly.

5. Updates from XPOD V5.4

5.1 Removed Modules

1. Plantower (PMS5003) PM sensor
2. Optical Particle Counter (OPC)
3. WIFI Module / Cellular Capabilities
4. PID Total VOC sensor

5.2 Power Updates

XPOD V5.4 has consistent power issues based in the design of the PCB. To solve these power issues, the XPOD V6.0M2 has a revised power structure resembling the YPOD. The primary change in this structure is the use of power polygons for the GND, VSS, 9V and the LM2670 output. A visual depiction of the change is shown below.

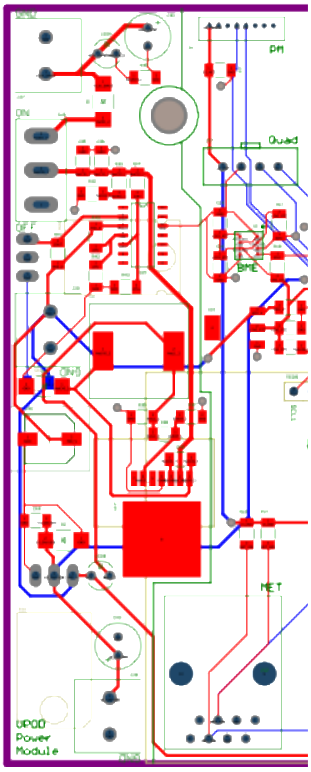

Figure 5: XPOD V5.4 Power Structure

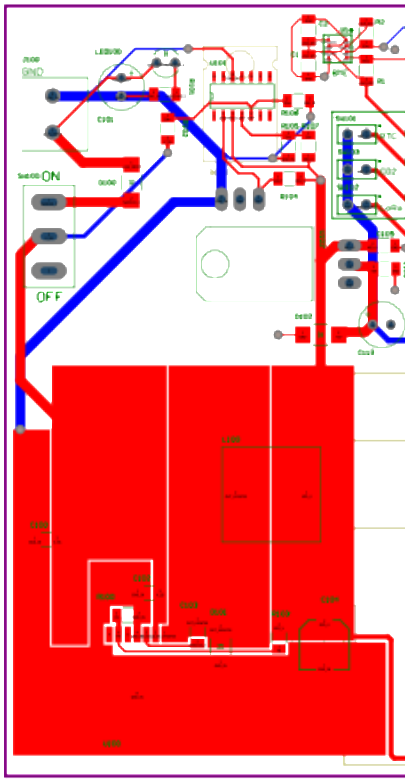

Figure 6: XPOD V6.0M2 Power Structure

5.3 VOC Numbering

The Figaro VOC Sensors in the XPOD V6.0M2 are numbered as follows:

- Figaro 2600: F1 (top) and F3 (bottom)
- Figaro 2602: F4 (top) and F2 (bottom).

This is not the order they will print to the SD card. They print in the order F1, F2, F3, F4. F3 and F4 print heater values after each sensor reading, so in an output file data would read F1, F2, F3, heater value, F4, heater value.

5.4 Jumper Switches

The XPOD V6.0M2 has five removable jumper switches that can turn on/off power to different sections of the board. There are switches implemented for the RTC/BME, CO2, SD/LoRa, LoRa and Fans. Each switch has a two pin header and an associated switch. When the switch is present, current flows through the component and the associated section is powered. When the switch is removed, current cannot flow, and the associated section does not receive power. The location and an image of each switch is displayed below.

Figure 7: Power Switches for RTC/BME, CO2, SD/LoRa

Figure 8: Switch for Fans

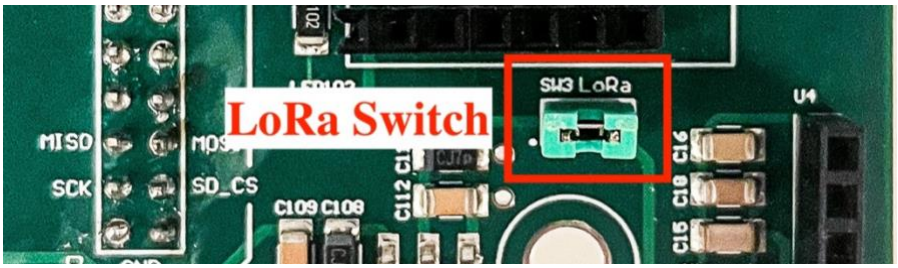

Figure 9: On/Off Switch for LoRa