XPOD V4.0 Datasheet

Guide to an Air Quality Measurement Device for Remote Sensing

Compiled By Chiara Pesce 6/26/25

1. Table of Contents

2. XPOD Sensors and Modules ***2***

2.1 Present Sensors 2

2.2 Present Modules 2

2.3 Power Specifications 2

3. PCB Modifications ***3***

3.1 MET Station PCB Alteration 3

3.2 Pump Alteration 4

3.3 OPC/CO_2 Modifications 5

4. General Information ***7***

4.1 Quadstat Breakout 7

4.2 Additional Photos 8

5. Firmware ***9***

6. Other Known Issues ***10***

6.1 Non-Functional Modules 10

6.2 Previous Problems and Fixes 11

2. XPOD Sensors and Modules

2.1 Present Sensors

SENSOR NAME	FUNCTION	METHOD	LOGIC
ELT S-300-3V	Carbon Dioxide (CO_2)	Absorbance / NDIR	3.3V
BOSCH BME 680	Temperature, Pressure, Relative Humidity	MEMS, Diode, MOX	3.3V
MICS 2611	Ozone (O_3)	MOX	5V
FIGARO TGS 2600	Volatile Organic Compounds (VOC)	MOX	5V
FIGARO TGS 2602	Volatile Organic Compounds (VOC)	MOX	5V
MQ-4	Flammable Gas / Methane	MOX	5V
PMS5003	Particulate Matter (PM1.0, PM2.5, PM10.0)	Laser Scattering	5V
ALPHASENSE CO-B4	Carbon Monoxide (CO)	Electrolytic	5V
ALPHASENSE OX-B431	Ozone (O_3), Nitrogen Dioxide (NO_2)	Electrolytic	5V
ALPHASENSE NO2-B43F	Nitrogen Dioxide (NO_2)	Electrolytic	5V
ALPHASENSE NO-B4	Nitric Oxide (NO)	Electrolytic	5V

2.2 Present Modules

MODULE NAME	FUNCTION
ARDUINO MEGA	Microcontroller
ADAFRUIT DS3231 BREAKOUT	RTC (Clock)
SD SHIELD BREAKOUT	Micro SD Data Storage
QUADSTAT	Alphasense Sensor Housing
FAN / PUMP	Airflow
OPC BREAKOUT SHIELD	OPC

2.3 Power Specifications

All XPOD versions should be run off 12V DC power at 2A. Modifications can be made for wall socket plug-ins or other DC power cables.

Figure 1: How to Properly Plug in a DC Power Cable

3. PCB Modifications

This Section will cover any modifications to the PCB (as ordered) required to run the XPOD V4.0 with full functionality.

3.1 MET Station PCB Alteration

Manual solder from Digital Pin 3 (indexed from 0, right to left top-down) to MET Pin 1 (indexed from 1, left to right top-down)

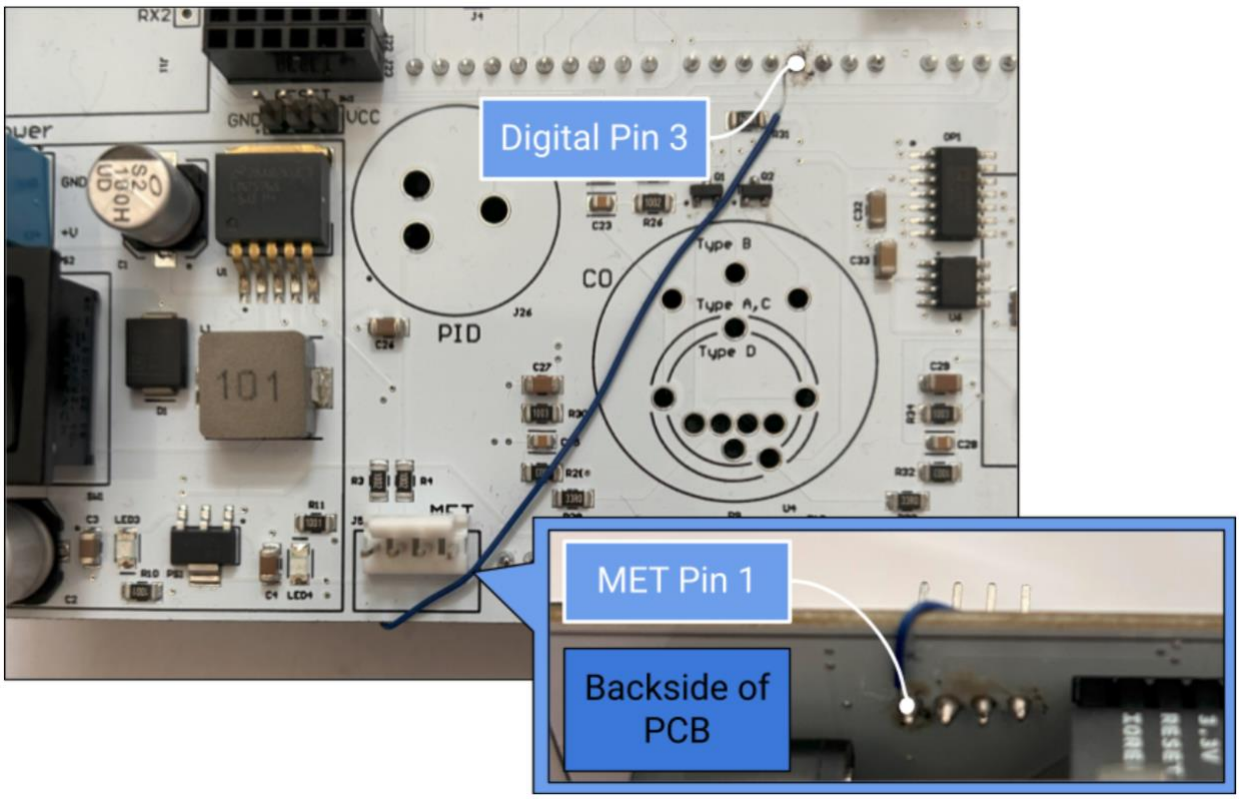

Figure 1: PCB Changed for MET Front and Back

3.2 Pump Alteration

Cut trace from D2 to C41, manual solder wire at C41, D2 as shown in *Figure 2.* Replace surface mounted R38 1002 resistor with 7150. External pump module and breadboard diagram shown below in *Figure 3.*

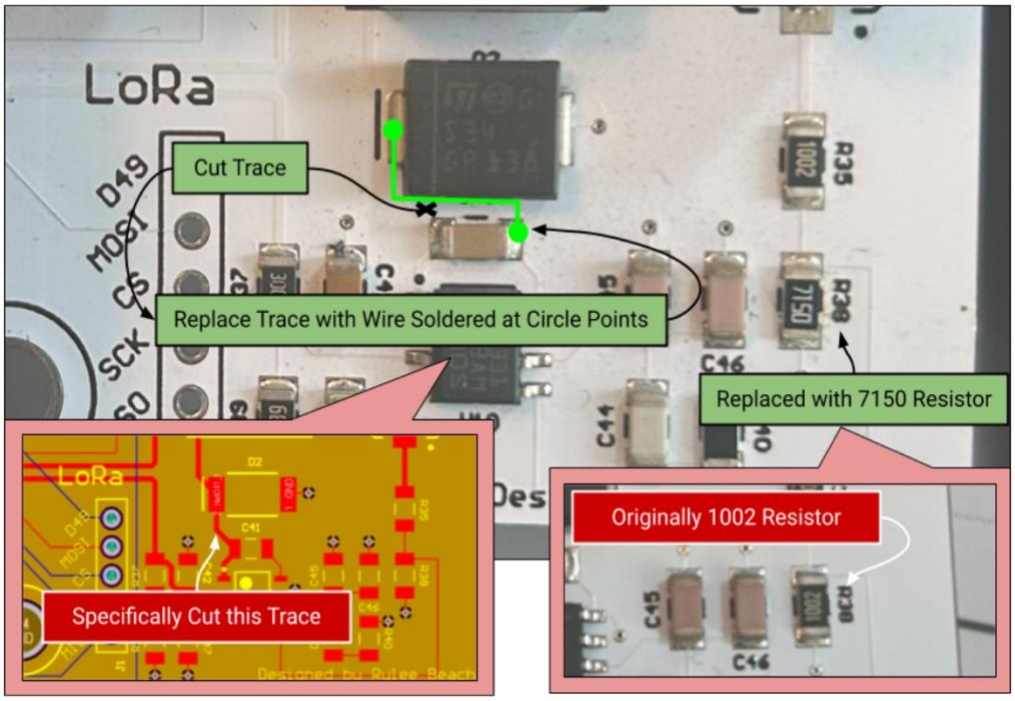

Figure 2: PCB Changes for Pump (Resistor and Re-Trace)

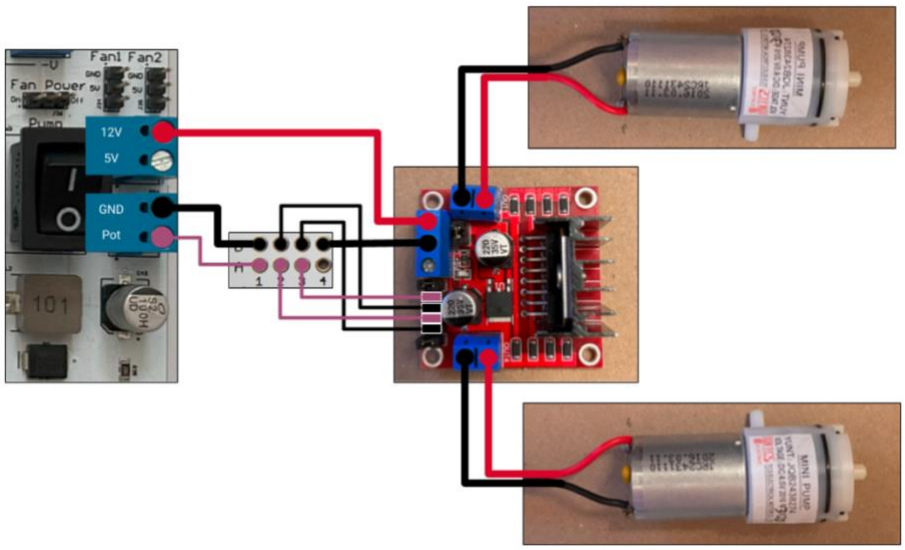

Figure 3: External Pump Module and Breadboard

3.3 OPC/CO_2 Modifications

OPC and CO_2 must have watchdog enabled to run. To prevent drawing too much current and setting off the watchdog, a capacitor is added between CO_2 VCC (4 pin) and TTL RXD (10 pin) headers (*Figure 4*). A separate breakout OPC shield must be soldered by hand as shown in *Figure 6* and *Figure 7*.

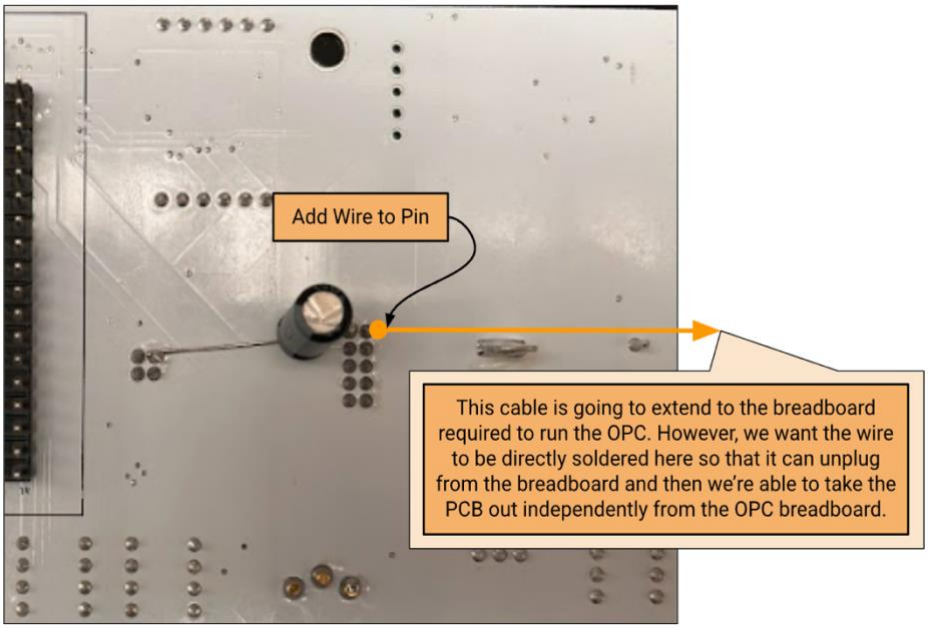

Figure 4: Backside of PCB Changes for OPC

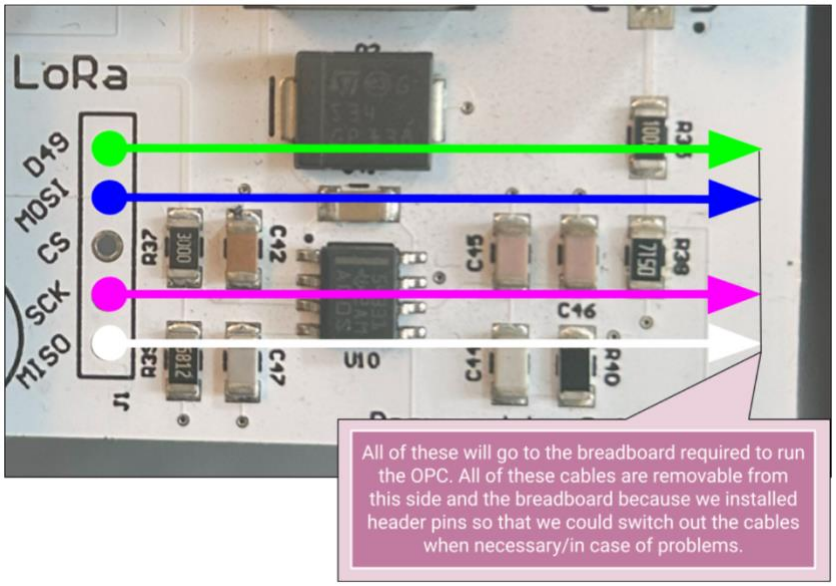

Figure 5: Frontside of PCB Changes for OPC

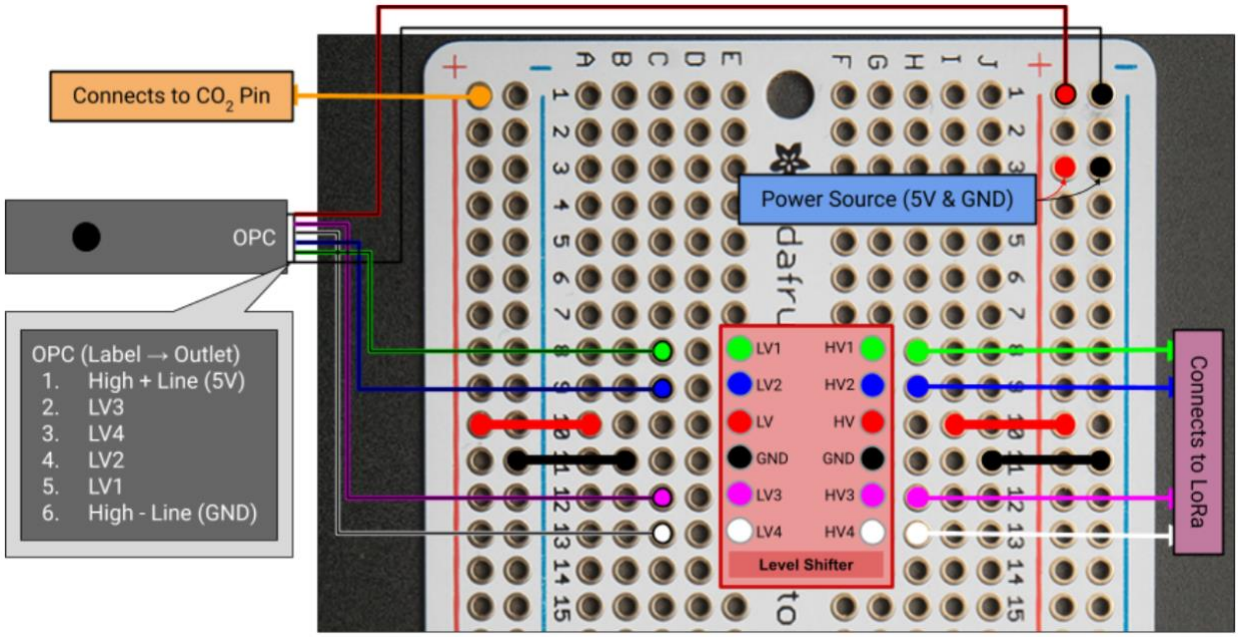

Figure 6: Creating OPC Breadboard

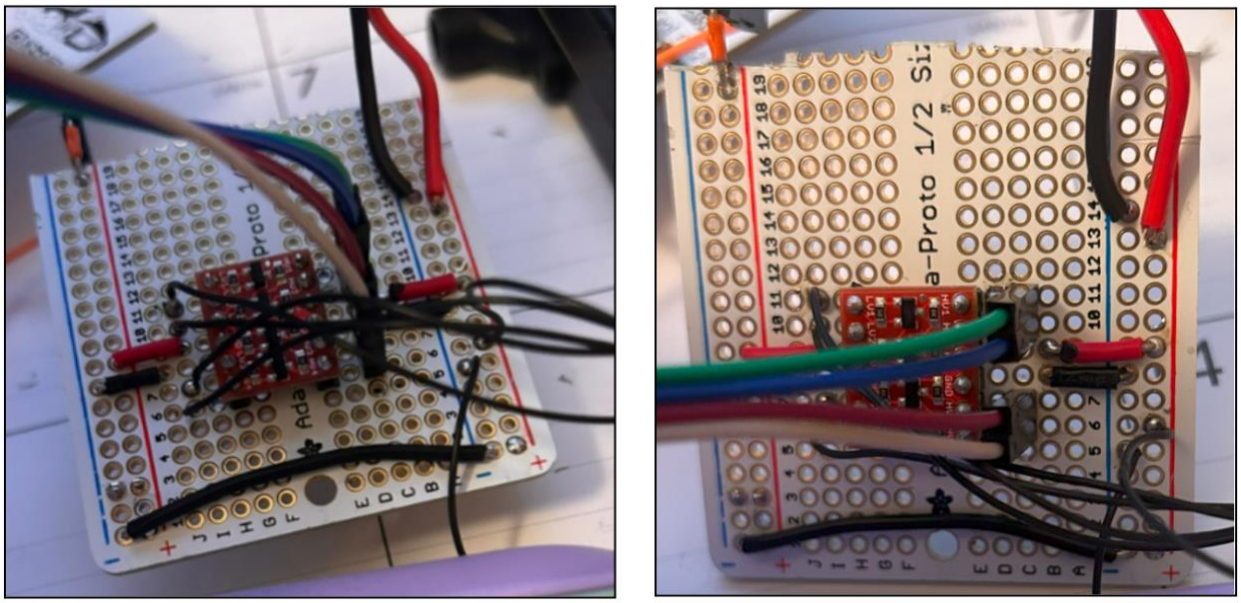

Figure 7: Photos of a Completed Breadboard Wiring

4. General Information

4.1 Quadstat Breakout

The Quadstat houses four Alphasense electrochemical sensors that target various gases such as Carbon Monoxide (CO), Nitric Oxide (NO), Nitrogen Dioxide (NO_2) and Ozone (O_3). The Quadstat can fit Alphasense A, B, C and D footprints. An example Layout is shown below (*Figure 8*) numbered from 1-4 in the order the data will display on the Micro SD card.

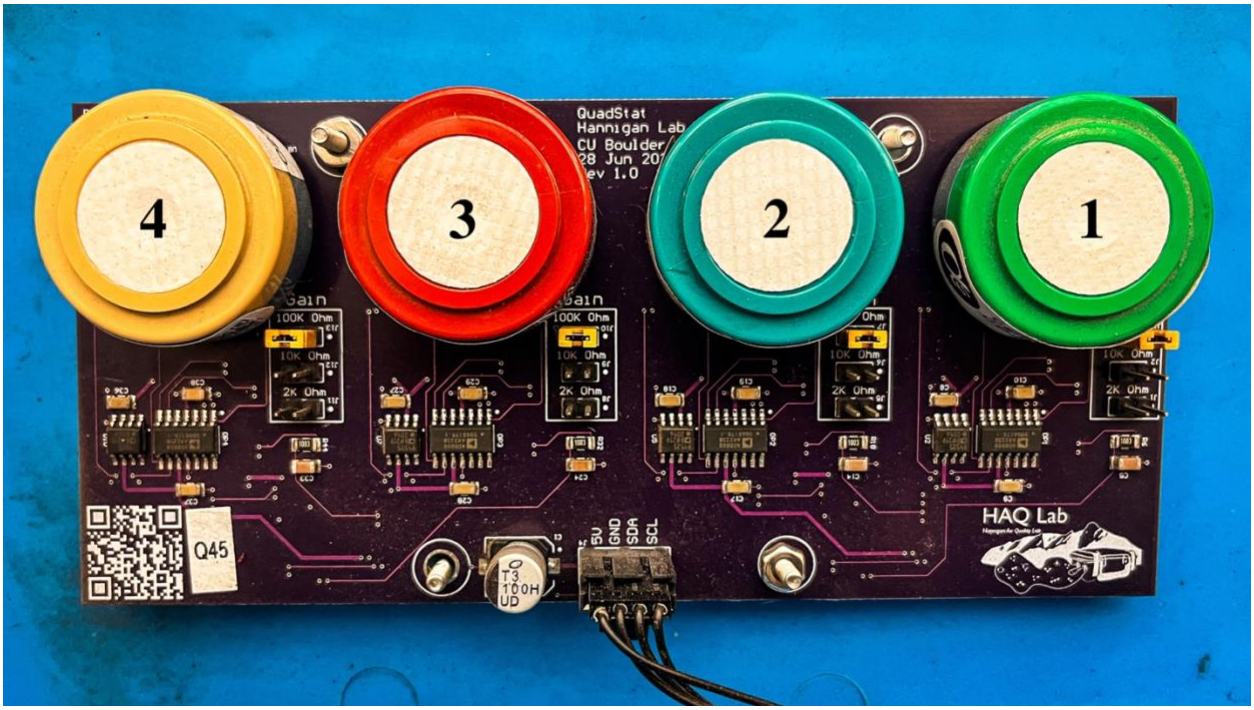

Figure 8: Quadstat Breakout Board with Numbered Sensors

When data is viewed on the SD card, each sensor will write two columns: "Auxiliary" and "Main". To use the data printed to the SD card, you must take the difference between the Auxiliary and Main channel values. An example that correlates with the Quadstat in Figure 8 is shown below.

SENSOR	1. Carbon Monoxide		2. Nitric Oxide		3. Nitrogen Dioxide		4. Ozone and Nitrogen Dioxide	
COLUMN	α1 Ch1	α1 Ch2	α1 Ch3	α1 Ch4	α2 Ch1	α2 Ch2	α2 Ch3	α2 Ch4
DATA	CO A	CO B	NO A	NO B	NO_2 A	NO_2 B	O_3 NO_2 A	O_3 NO_2 B

4.2 Additional Photos

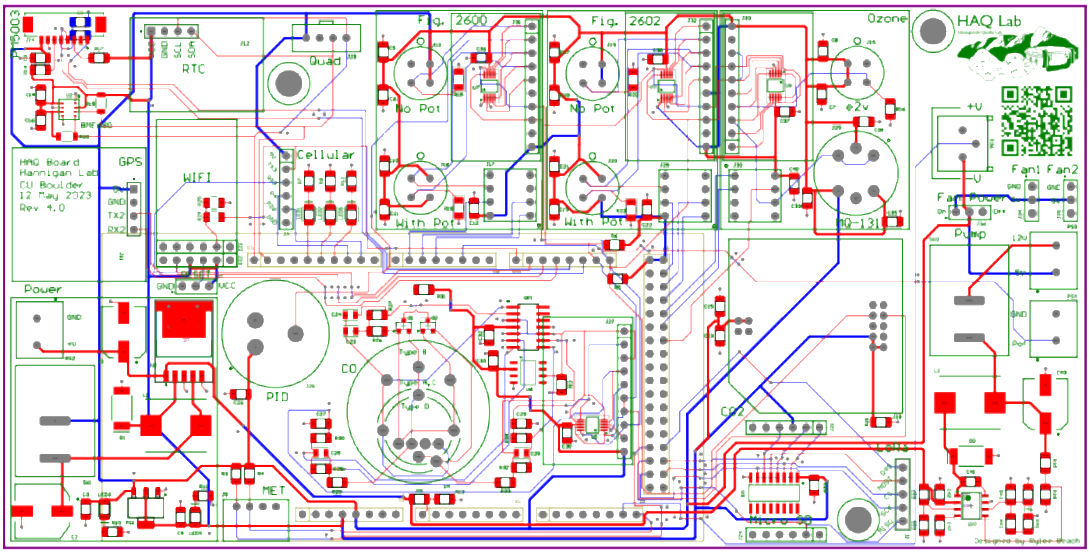

Figure 10: Altium Composite Displaying Top (Red) Traces and Bottom (Blue) Traces

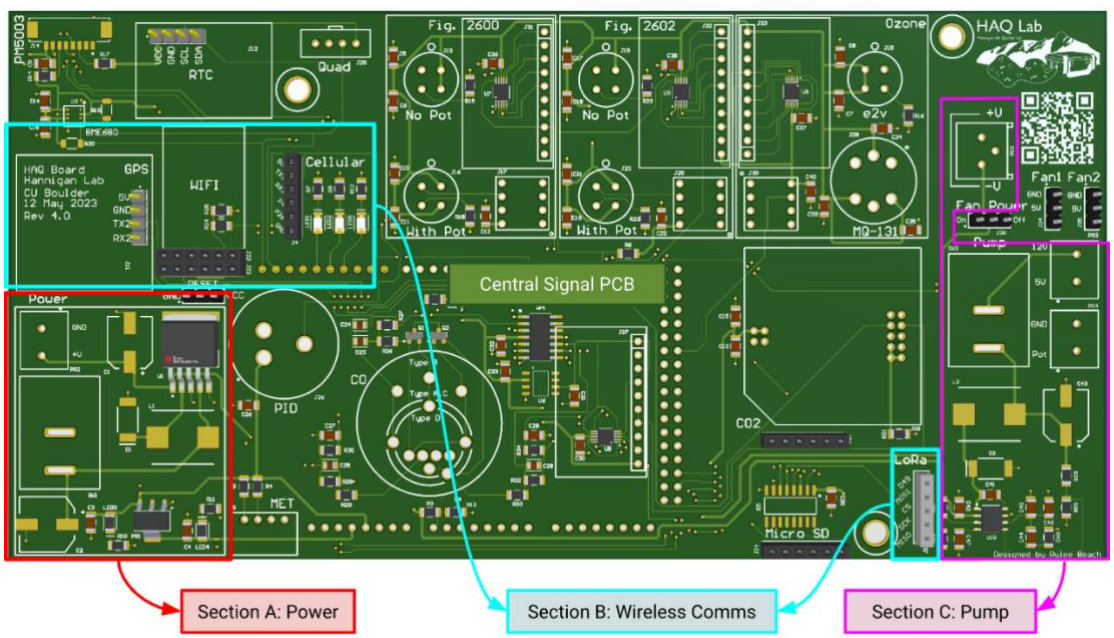

Figure 9: PCB Infrastructure Sections

5. Firmware

This section will cover the associated XPOD firmware. The current Firmware version is xpod_V3.2.3 which can be found in the HAQ Lab GitHub.

https://github.com/HanniganAirQuality

VERSION	NAME	PILOT	DATE	DESCRIPTION
V3.1.2	Initial Upload	Percy	7/10/24	Moving docs to central git.
V3.2.0	UTC Pilot	Percy	10/2/24	Fulfills feature request for UTC timestamps.
V3.2.1	EXT LED Mod	Percy	10/3/24	External LED support.
V3.2.2	Landscaping	Percy	10/4/24	Trims unused FW- Motor control, GPS, OPC.
V3.2.3	PCB LED Repair	Percy	10/18/24	Fixes LEDs on PCB and updates .h file.
V4.0.0	Plantower Repair	Percy	In Progress	

To utilize the V3.2 firmware, you need to:

1. **Move all un-zipped libraries into your Documents/Arduino/libraries folder** on your computer to ensure Arduino can compile with the appropriate libraries.
    a. On some versions of the code, you will get prompted to update certain libraries. Please decline, this may interfere with the current firmware version. If a library needs to be updated in a firmware update, it will be updated in the associated libraries folder.

2. Open the .ino file and wait for all associated .h and .cpp files to open.
    a. The .ino file is the main Arduino script. It has a setup (void setup ()) function the Arduino runs once, and a loop (void loop ()) function that will run until the Arduino loses power.

If using the XPOD V3.1.2 Firmware, associated headers can be found in the V3.1 folder under XPODV3.1.2_Headers.xlsx or referenced below.

[QS1_C1, QS1_C2, QS2_C1, QS2_C2, QS3_C1, QS3_C2, QS4_C1, QS4_C2, MET_spd, MET_dir, MQ, PM1.0_ENV, PM2.5_ENV, PM10.0_ENV, PM03um, PM10um, PM25um, PM50um]

In any XPOD Firmware version, to adjust which sensors used by the Arduino, change the associated #define statement in the xpod_node.h script to 1 (active) or 0 (inactive) and reupload firmware to the Arduino.

Please ensure the Watchdog (#define THE_DAWG) is always set to 1 for the CO2 sensor to function properly.

6. Other Known Issues

6.1 Non-Functional Modules

On the XPOD V4.0, LoRa (wireless communication), WIFI and Cellular sections of the board are non-functional or need heavy modification to fix. Locations of each module are shown below (*Figure 10, Figure 11).*

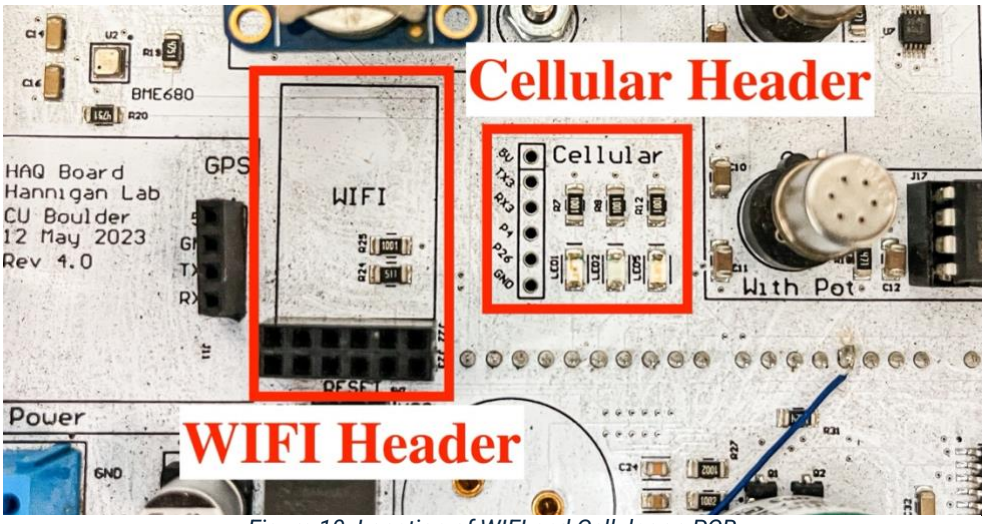

Figure 10: Location of WIFI and Cellular on PCB

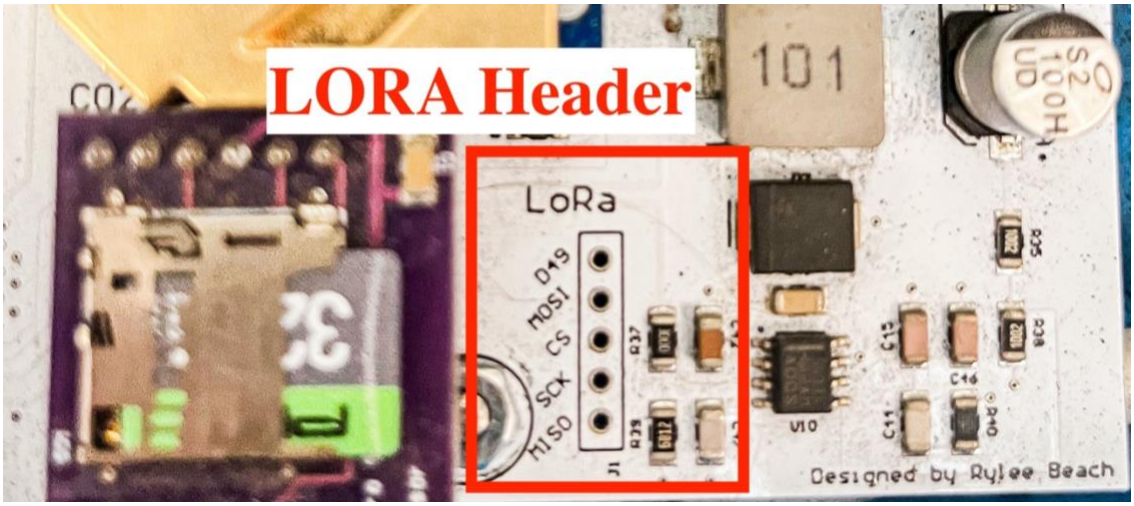

Figure 11: Location of LoRa Header on PCB

6.2 Previous Problems and Fixes

1. Long term run issues from CO_2 overdraw, corrupting data (XPOD stops sampling for periods of time). Fixed by adding a capacitor to the back of the board and adding a watchdog to the firmware.
2. RTC logging issue, fixed with firmware patch.
3. PM sampling irregularity, fixed with bypass.
4. BME only works with serial on, fixed by permanently enabling serial monitor.
5. Issue with CO, fixed by writing firmware update to write on both Auxiliary and Main channels (Firmware update 3.1.0) instead of calculating internally (reference Quadstat Breakout section above)
6. MET and timing interference, fixed by removing constant time intervals so MET station can function.
7. Issue with GPS, most likely overdrawing from CO_2 and GPS causing power pulses.
8. Y2K issue with XPODs, fixed by copying YPOD naming convention (SD.h and Adafruit_fork libraries have documented character limits).
9. Polarity issue with plugs, fixed by ensuring R->R and B->B.

Most common issues:

1. Plugging in the RTC to the wrong pins or plugging it in misaligned.
2. Forgetting to initialize the RTC (Y2K issue)
3. Loose solder in the RTC pins (look for 2008 timestamps)
4. Bridged solder in the PM header (look for 2080 timestamps