iJRASET
International Journal For Research in Applied Science and Engineering Technology

INTERNATIONAL JOURNAL FOR RESEARCH

IN APPLIED SCIENCE & ENGINEERING TECHNOLOGY

Volume: 7 **Issue:** VIII **Month of publication:** August 2019

DOI: http://doi.org/10.22214/ijraset.2019.8058

www.ijraset.com

Call: 08813907089 | E-mail ID: ijraset@gmail.com

International Journal for Research in Applied Science & Engineering Technology (IJRASET)
ISSN: 2321-9653; IC Value: 45.98; SJ Impact Factor: 7.177
Volume 7 Issue VIII, Aug 2019- Available at www.ijraset.com

Design of PLC based Elevator Control System

Theint Theint Soe[1], Kyaw Kyaw Ko[2], Pann Ei San[3]
[1]Faculty of Electronic Engineering, University of Technology (Yatanapon Cyber City), Myanmar
[2, 3]Department of Electronic Engineering, Technological University (Lashio), Myanmar

Abstract: This paper describes Programming Logic Controller (PLC) based elevator control system. An elevator is one of the important aspects in electronic control module in automotive application. The system mainly focuses on using PLC to control the circuit and building the elevator model. Proximity sensor is used to detect the metal. DC motor is used to control up and down movement of the elevator car. Push buttons are used to call the elevator car. The elevator position is described by using the display unit. Arduino UNO is used to drive the seven segment display unit. Ladder Diagram is used for four floors control system. PLC gives the command to the relays. Relays operate the DC motor in forward direction and reverse direction. Based on this relay operation, elevator is move up and down.

Keywords: PLC, Elevator, Proximity sensor, DC motor, Arduino UNO, Display Unit, Ladder Diagram

I. INTRODUCTION

With the overall rapid development taking place in all spheres, the living standard of human being has tremendously increased as such the high rise buildings are constructed for malls, and housing purposes. Thus the installation of elevators in these high rise buildings becomes an integral part of the infrastructure for the movement of goods and people. So, the control system is essential in the smooth and safe operation of the elevator. Elevator control system is needed to control all the functions of the elevator. The elevator is a device used for cargo and people vertically. The elevator begins from the need to travel, quick transportation of people from low position to high position and vice versa. Elevator helps to reduce costs of time and energy of human labour. In industry, elevators are used to transport goods, materials and help workers to work at different height. In addition, the elevator is widely used in all sectors such as building, offices, hospitals and hotels [1]. Elevators help people save time, energy and increased job. It is the one which guides the elevator car, which actually carries the passengers between the different floors; it also controls the opening and the closing of doors at different floors are also controlled by the elevator control system [1]. This thesis is to design and construct an elevator using a programmable logic controller. Hydraulic and roped elevators are the two types of elevators in use today.

II. PROPOSED SYSTEM DESIGN

This thesis is mainly based on PLC. Mitsubishi FX1s14 MR is used for this thesis. This is a typical and most popular type of elevator consisting of a rope or cables which run over a pulley connected to an electric motor. Cables are attached to the top of the elevator car by wrapping around it on sheaves at one end and the other end is attached to the counter weight that moves up the down. The weight of elevator car is equal to the counter weight. When the elevator car is moving upward, the counter weight will move downward. In this PLC-based elevator control system, two supply voltages 5V and 12V are used. Proximity sensors, Arduino UNO, display and relay modules are supplied by 5V. Motors, call buttons, LED drivers and relays are supplied by 12V.In this thesis, there are four sensors, eight displays and nine push button, 12V DC motor in total. Proximity sensor is applied to all floor elevators. When the elevator car reaches on sensor, the system will run in PLC and start working. As soon as the desired floor is pressed with push button, display will show the desired floor at the panel of elevator. When the elevator car is reached to the caller, the door of elevator car will open. After waiting for 3 seconds, the close switch is pressed. After that the elevator car will move to the input desired floor. When the elevator car is reached to the desired floor, the door of elevator car will open for 3 seconds. And then the close switch is pressed.

III.BLOCK DIAGRAM OF PLC-BASED ELEVATOR CONTROL SYSTEM

The programmable logic controller is designed as eight inputs and six outputs as shown in Fig. 1. The eight inputs are four call buttons and four sensors. Relays, motors and displays are output. 220V power supply is used to run the whole process. 5V power supply is used for Arduino UNO, display, sensors and motors (for door close and open). 12V power supply is for display driver, relays and motors (for up and down motions). Sensors and displays are used at the input section. Motors and relays are used at the output section. The whole system is controlled with the PLC. PLC receives the input signal from the proximity sensors and transmits the signals to the outputs (relays and motors).

©IJRASET: All Rights are Reserved

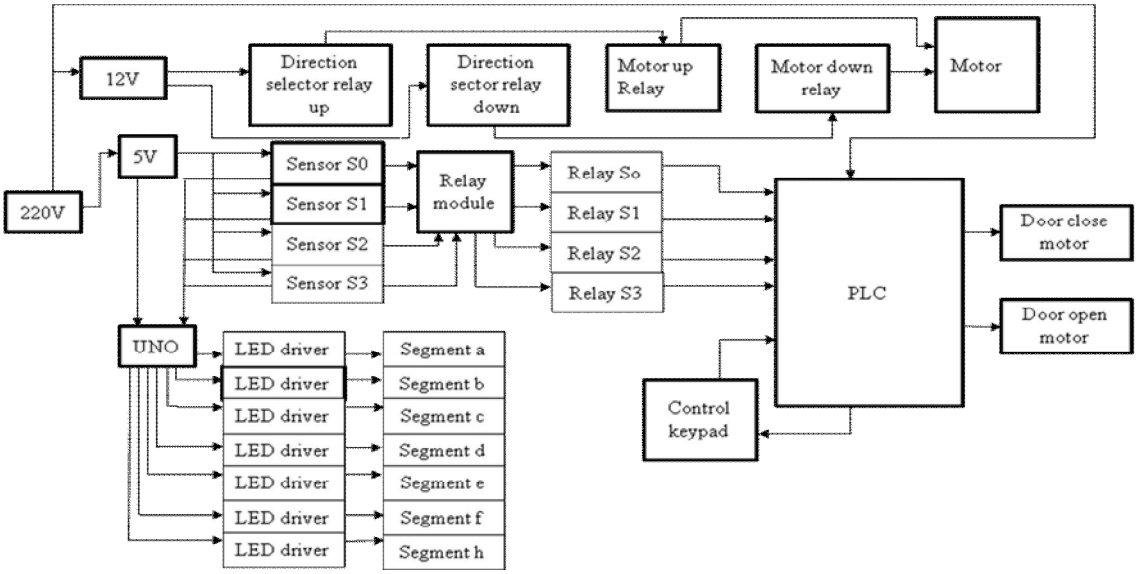

Fig. 1 Block Diagram of PLC Elevator Control System

A. PLC Control

A programmable logic controller (PLC) is a special form of microprocessor-based controller that uses programmable memory to store instructions and to implement functions such as logic, sequencing, timing, counting, and arithmetic in order to control machines and processes. It is designed to be operated by engineers with perhaps a limited knowledge of computers and computing languages [2]. They are not designed so that only computer programmers can set up or change the programs. Thus, the designers of the PLC have preprogrammed it so that the control program can be entered using a simple, rather intuitive form of language [3].

B. Arduino Board

Arduino board designs use a variety of microprocessors and controllers. The boards are equipped with sets of digital and analog input/output (I/O) pins that may be interfaced to various expansion boards or Breadboards (shields) and other circuits. The boards feature serial communications interfaces, including Universal Serial Bus (USB) on some models, which are also used for loading programs from personal computers [4]. The microcontrollers are typically programmed using a dialect of features from the programming languages C and C++. In addition to using traditional compiler tool chains, the Arduino project provides an integrated development environment (IDE) based on the Processing language project.

C. Proximity Sensors

Proximity sensors or switches are polit decives that detect the presence of an object (usually called the target) without physical contact. These solid-state electronic devices are completely encapsulated to protect against excessive vibration, liquids, chemicals, and corrosive agents found in the industrial environments.

D. Push Button

A push-button or simply button is a simple swich mechanism for controlling some aspects of machine or a process. A push button is a momentary or non-latching switch which causes a temporay change in the state of an electrical circuit only while the switch is physically actuated. An automatic mechanism (i.e. a spring) returns the switch to its default position immediately afterwards, restoring the initial circuit condtion. Buttons are typically made out of hard material, usually plastic or metal. The surface is usually flat or shaped to accommodate the human fingr or hand, so as to be easily depressed or pushed. Buttons are most often based switches, though even many un-biased buttons require a spring to return to their un-pushed state. Different people use different terms for the “pushing” of the burron, such as press, depress, mash,, hit, and punch [5].

E. DC Motor Operation

DC motor is a machine that transforms electric energy into mechanical energy in form of rotation. Its movement is produced by the physical behavior of electromagnetism. DC motors have inductors inside, which produce the magnetic field used to generate movement [6]. A motor is an electrical machine which converts electrical energy into mechanical energy. The principle of working of a DC motor is that "whenever a current carrying conductor is placed in a magnetic field, it experiences a mechanical force".

©IJRASET: All Rights are Reserved

F. Seven- Segment Display

A seven-segment display (SSD), or seven-segment indicator, is a form of electronic display device for displaying decimal numerals that is an alternative to the more complex dot-matrix displays. Seven-segment displays are widely used in digital clocks, electronic meters, and other electronic devices for displaying numerical information. A seven-segment display, as its name indicates, is composed of seven elements. Individually on or off, that can be combined to produce simplified representations of the Arabic numerals. The seven segments are arranged as a rectangle of two vertical segments on each side with one horizontal segment on the top, middle, and bottom. Additionally, the seventh segment bisects the rectangle horizontally [7]. There are also fourteen-segment displays and sixteen-segment displays (for full alphanumeric). This BCD to seven segment display indicates the current floor position of elevator in this system. The seven segment display is used for floor indication.

G. Relay

A relay is an electromagnetic switch; hence, its heart is the electromagnet, which is powered by a small current that acts as a lever or as the switch itself. This makes it possible to allow relatively small electric currents to leverage and control much larger electrical currents. Sensors are sensitive devices, and they only produce small amounts of electric currents, but in order for a sensor to drive larger pieces of equipment it needs something that would switch on this equipment by allowing larger currents to flow. In this way, the sensor can act as the control input for the relay so that when it is activated, larger currents flow to the equipment. For example, photo or light sensors can be assigned to control outdoor lights so that when it becomes dark outside the light sensors activate the relays, which act as the light switches.

H. Power Supply

A power supply is an electrical device that supplies electric power to an electrical load. The primary function of a power supply is to convert electric current from a source to the correct voltage, current, and frequency to power the load. As a result, power supplies are sometimes referred to as electric power converters. Some power supplies are separate standalone pieces of equipment, while others are built into the load appliances that they power. In this system, the PLC operates on +5volts and -5volts DC. Therefore the PLC CPU must contain circuitry to convert 230 volts AC input to the required 5 volts DC value [8].

IV. DESIGN IMPLEMENTATION OF *LADDER LOGIC OPERATIONS*

A. Network 1, Button/Call Memory

1) When the car is called at the ground levels C0 and M0 must be normally closed.
2) When the car is called at level (4), C1 and M1 must be normally opened and S1 must be normally closed.
3) When the car is called at level (2), C2 and M2 must be normally opened and S2 must be normally closed.
4) When the car is called at level (3), C3 and M3 must be normally opened and S3 must be normally closed as shown in Fig. 2 .

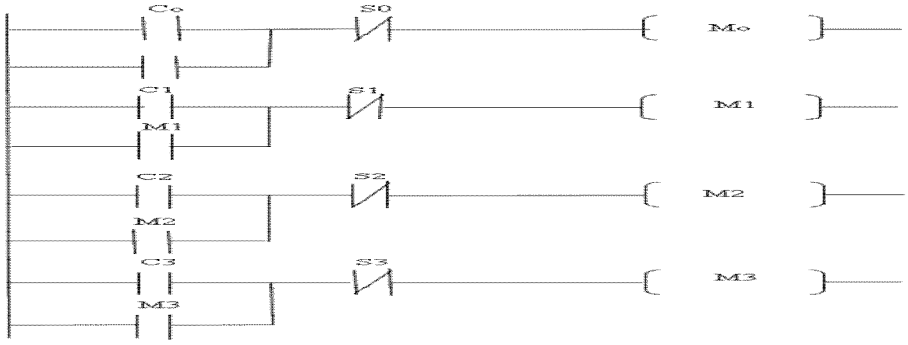

Fig. 2 Ladder Diagram of Button/Call Memory

B. Network 2, Up & Down

1) To lift the car up S_0 must be normally opened and S_3 and R_{DN} be normally closed. As output R_{up} is opened.
2) If the car is going to upward, M_1, M_2, M_3 must be normally opened. At M_4, it is normally closed. As an output, R_{UP} is still opened.
3) To down the car S_3 must be normally opened and S_0 and R_{UP} must be normally closed. As output, R_D is opened.
4) For the car is going to download M_0, M_1, M_2 must be normally opened. At M_4, it is normally closed. As an output, R_{DN} is still opened as depicted in Fig.3.

©IJRASET: All Rights are Reserved

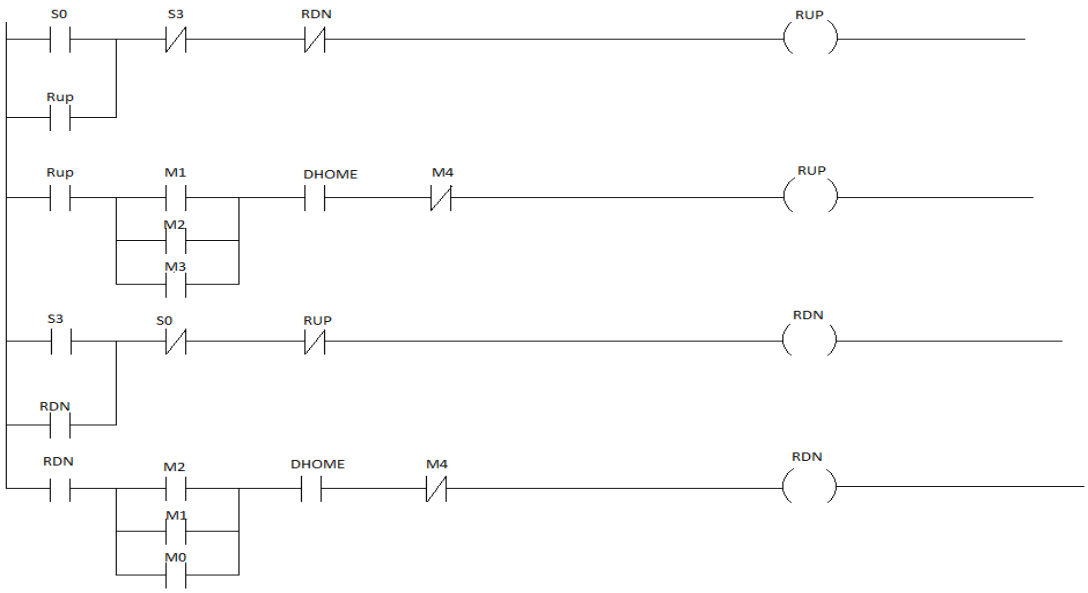

Fig. 3 Ladder Diagram of Up and Down

C. Network 3, Stop /Rest Car

1) To stop, the car where the car is called at the ground level, M0, S0 and M4 must be normally opened.
2) At level (1), M1, S1 and M4 must be normally opened.
3) At level (2), M2, S2 and M4 must be normally opened.
4) At level (3), M3 S3 and M4 must be normally opened as illustrated in Fig.4.

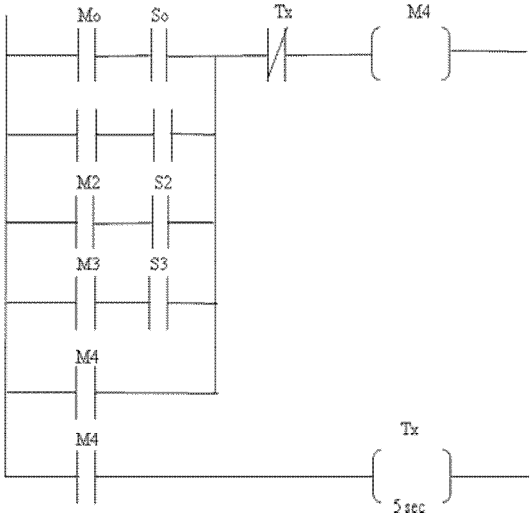

Fig. 4 Ladder Diagram of Stop /Rest Car

D. Network 4, Display

1) At ground level, S_0 and $LAMP_0$ must be normally opened, S_1 must be normally closed.
2) At level (1), S_1 and $LAMP_1$ must be normally opened, S_2 must be normally closed.
3) At $_{level}$ (2), S_2 and $LAMP_2$ must be normally opened, S_3 must be normally close. At level (3), S_3 and $LAMP_3$ must be normally opened, S_0 must be normally closed as shown in Fig. 5 .

©IJRASET: All Rights are Reserved

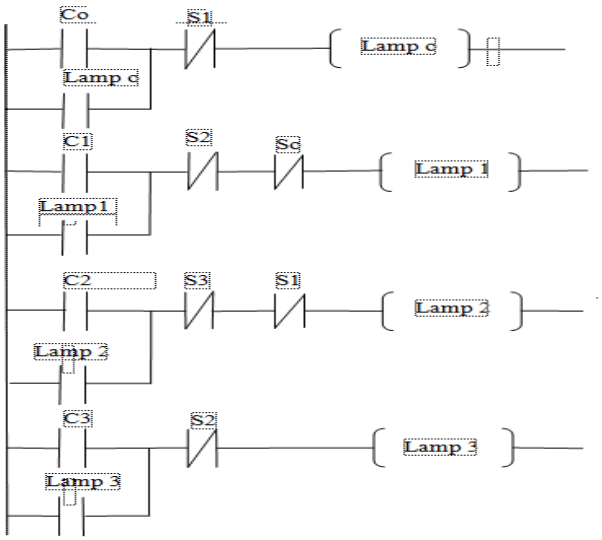

Fig. 5 Ladder Diagram of Display

E. Network 5, Door Open/Close

1) At ground level, M_0, S_0 and D_{HOME} must be normally opened. S_1, S_2, S_3 and D_{LS} must be normally closed.

2) At ground level, M_0, S_0 and D_{HOME} must be normally opened. S_1,S_2,S_3 and D_{LS} must be normally closed.

3) At ground level, M_0, S_0 and D_{HOME} must be normally opened. S_1,S_2,S_3 and D_{LS} must be normally closed.

4) At ground level, M_0, S_0 and D_{HOME} must be normally opened. S_1,S_2,S_3 and D_{LS} must be normally closed as illustrated in Fig. 6.

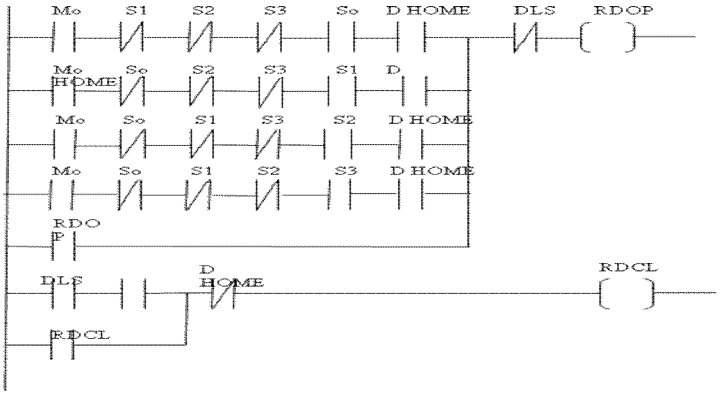

Fig. 6 Ladder Diagram of Door Open/Close

V. CONCLUSIONS AND FURTHER EXTENSION

In the modern developed world elevators are becoming more important with the development of architecture technology. Previously, relays and IC boards were used for controlling of elevator. But due to its inconvenience now it is replaced by PLC. PLC is easy for controlling machines used in elevator. By using inputs signals from operator and sensors control operations are performed such as moving forward and reverse, door opening and closing etc. According to that signal PLC will make the drive motor and door motor to work correspondingly. The proposed system has been implemented by using Ladder diagram programming as it is easy to program the PLC. By developing this proposed system, the result of elevator control system can be applied in the real world. This elevator system can be expanded by using additional inputs and outputs of PLC to control elevator for high rise buildings and more features can be offered in this system. A breaking system must be added insure safety and quality of services. Motion sensors can be used to prevent the door from closing while there is an object that is not entirely in the car this increases the safety of the system. Weight sensor can be added to each floor to know which floor has the maximum crowd. This can be extended by adding emergency lighting, camera, and alarm or help button for overload. First come first serve method can be employed by making changed in ladder programming. Solar energy can be also used for controlling this elevator system instead of electricity.

©IJRASET: All Rights are Reserved

VI. ACKNOWLEDGMENT

The author wishes to express her extremely grateful to her beloved parents and all of her younger brothers. The author wishes to express her deep gratitude to all teachers who taught and supported her completion. The author is thankful to Dr. Aung Win, Rector (Acting), University of Technology (Yatanarpon Cyber City) for his kind suggestions. The author is grateful to her Dean, Dr. Htin Kyaw Oo, Professor and Head, University of Technology (Yatanapon Cyber City) for his good advice. Finally the author also thanks to IJRASET Journal Team.

REFERENCES

[1] Hongqun Li, Yue Zhou, PLC Control and Real-time Monitoring of a Sightseeing Lift.Techniques of Automation & Applications, 2008,Vol.27 No.11.
[2] Sandar Htay, Su Su Yi Mon, "Implementation of PLC for Elevator Control System", International Journal of Electronics & Computer Science Engineering – ISSN-2277-1956www.ijecse.org
[3] Yaing Sun, " Teaching Module Design of Elevator Controlled by PLC", MICROCOMPUTER APPLICATIONS, 2013, pp.63-67, 31(5).
[4] SM, Arduino, 2016, http//www.arduino.org download
[5] Darshil, Sagar, Rajiv, Pangaokar and S.A. Sharma "Development of a PLC Based Elevator System with Colour Sensing Capabilities for Material Handling in Industrial Plant", Jiont International Conference on Power System Technology and IEEE Power India Conference, 2008,pp.1-7
[6] Xiaojuan Liu, Development of Elevator Monitor System Based on the Fieldbus, February 2008,Vol.30 No.1. Journal of EEE.
[7] Caiqiao Wei"Design of Control System of Construction Elevator Based on PLC", 2014 4 Electronic System_ Integration Technology Conference.
[8] Jae Sung Yu, Sun Mo Hwang and Chung-Yuen Won (2009) "Performances of fuzzy-logic-based vector control for permanent magnet synchronous motor used in elevator drive system", In proceedings of 30th Annual Conference of IEEE Industrial, pp. 98-112, 2009

©IJRASET: All Rights are Reserved

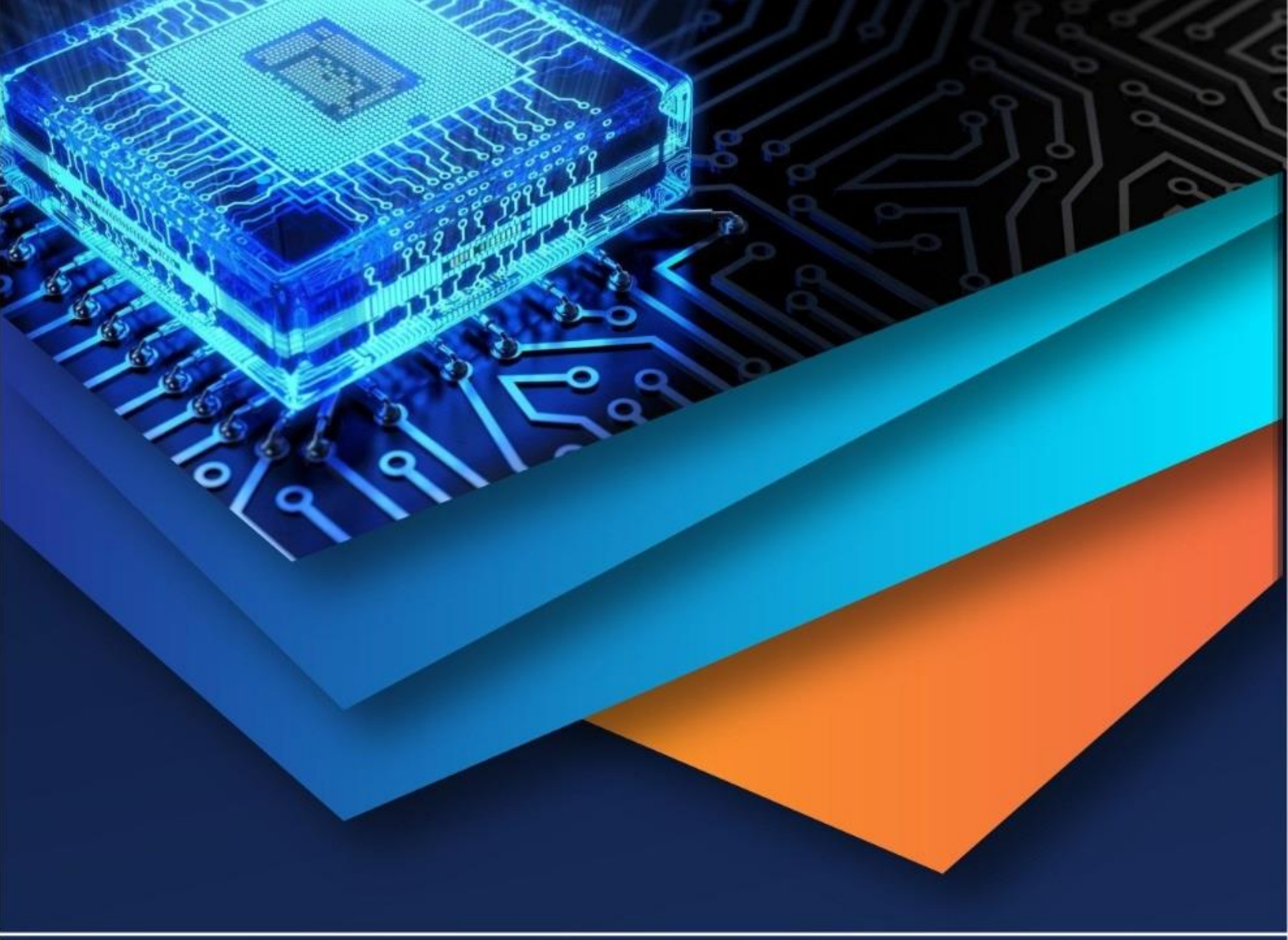

10.22214/IJRASET

45.98

IMPACT FACTOR: 7.129

IMPACT FACTOR: 7.429

INTERNATIONAL JOURNAL FOR RESEARCH

IN APPLIED SCIENCE & ENGINEERING TECHNOLOGY

Call : 08813907089 (24*7 Support on Whatsapp)