IOP Conference Series: Materials Science and Engineering

PURPOSE-LED PUBLISHING™

PAPER • **OPEN ACCESS**

Intelligent elevator control and safety monitoring system

To cite this article: Dan Shi and Bixi Xu 2018 *IOP Conf. Ser.: Mater. Sci. Eng.* **366** 012076

View the article online for updates and enhancements.

You may also like

- A multi-sensor fusion approach for centimeter-level indoor 3D localization of wheeled robots
Mingliang Yang, Kunyu Han, Tianang Sun et al.

- Research on aerodynamic characteristics and energy consumption of elevator deflectors under different speed conditions
Xiren Chen, Wenhua Ye, Xuan Lu et al.

- Fault diagnosis methods for electromechanical special equipment: review and prospects
Yunlong Li, Jin Liu, Xiuli Tang et al.

This content was downloaded from IP address 23.106.134.42 on 11/03/2026 at 11:39

IOP Conf. Series: Materials Science and Engineering **366** (2018) 012076 doi:10.1088/1757-899X/366/1/012076

Intelligent elevator control and safety monitoring system

Shi Dan[1] and Xu Bixi[1]

[1]College of Electrical Engineering and Control Science, Nanjing Tech University, Nanjing, China

[a]Corresponding Email:2276596470@qq.com

Abstract: Nowadays, China, as the largest market in the global elevator industry, has become a closely related vertical transportation tool. The intelligence, safety and reliability of elevators are becoming a common concern among the state, elevator manufacturers and users[1-3]. In recent years, due to the excessive reliance on traditional technology, the user has caused casualties in the actual use due to improper operation. However, the use of elevators causes many casualties, which can be avoided from a technical point of view. Therefore, in this paper, on the basis of the traditional Internet technology, increase the microprocessor technology, automatic sensing technology, remote control technology, speech recognition technology and the establishment of the elevator safety operation regulation system, put forward the concept of "intelligent elevator" system, this system in practice, will greatly facilitate People's Daily travel and improve the safety and reliability of the elevator, the elevator more intelligent, better service to the society.

1. Introduction

Today, the elevator has been one of the important tool of People's Daily travel, but how to make the elevator is more convenient, smart, has plagued the people. Therefore, in this paper, we put forward the concept of "intelligent elevator".

2. Fundamental theories

2.1. Design objectives

The elevator control system can achieve the following three objectives.

2.1.1. Automatic induction of elevator doors. Using infrared induction technology, users can only make a stop at the automatic sensing area in front of the elevator, and the doors of the elevator can be opened automatically without manual manipulation.

2.1.2. Speech control. After the user enters the elevator, the elevator door shut down automatically triggers the elevator speech control system, voice guide users to select floor, according to user's voice response decisions and perform the corresponding instruction, it is also without any difficulty[4].

2.1.3. Remote control technology. On the base of ordinary elevator, the elevator call function and elevator arrival feedback function are added. Before the user goes out to take the elevator, through the common mobile terminal (e.g. app). The device can remotely call the elevator, and when the elevator

Content from this work may be used under the terms of the Creative Commons Attribution 3.0 licence. Any further distribution of this work must maintain attribution to the author(s) and the title of the work, journal citation and DOI.
Published under licence by IOP Publishing Ltd

reaches the designated floor, the terminal will receive feedback (for example: vibration or ring tones), alert the user in real time, and avoid a long wait[5].

2.1.4. Elevator safety operation supervision system. Inside and outside the system software in e-government construct multiple application subsystem, network and Internet to the competent department of industry, the lift owner, pipe unit, the elevator manufacturing unit, elevator maintenance unit and the social public to provide information about the elevator operation and management of all kinds of services[6].

2.2. Design scheme

In the elevator control system based on the original add a set of infrared sensor systems, a voice control system, a remote control system and a set of remote monitoring system for the above four target can be realized, as shown in fig.1[7].

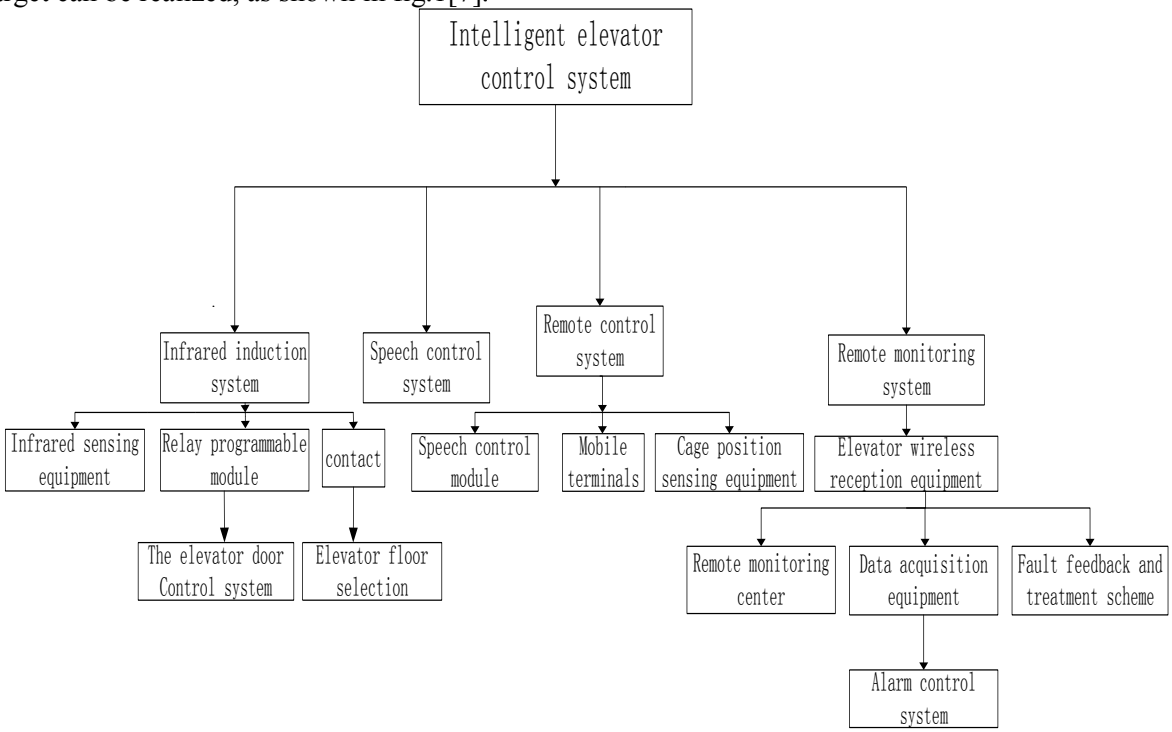

Figure 1. block diagram of intelligent elevator control system

2.2.1. Infrared sensor system. Programmable infrared sensing system by relay module and original elevator of elevator door machine system to achieve seamless docking, voice control system via voice control module and original floor choice of elevator system achieve seamless docking, remote control system through the relay and original elevator elevator system achieve seamless docking[8].

*2.2.2. Speech control system.*At the moment when the elevator door is closed, can trigger the elevator floor voice control system began to work, until you receive the two effective signal or close the door after more than 20 seconds (mainly first come), elevator floor voice control system to stop working. The workflow of the speech control system, as shown in Fig.2[9].

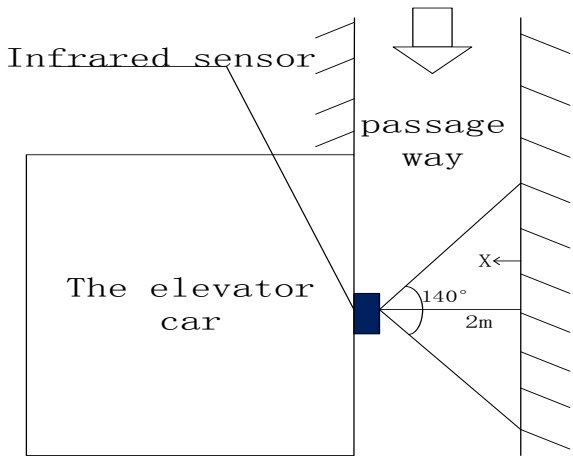

Figure 2. workflow of speech control system

2.2.3. Remote control technology. The working flow of elevator remote control system is shown in fig.3.

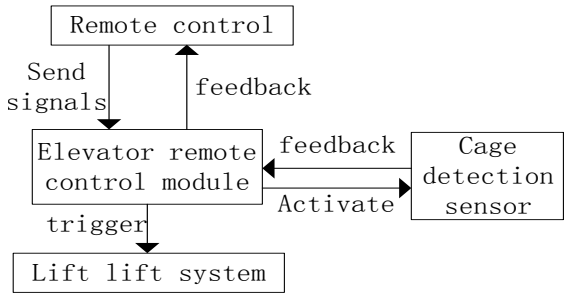

Figure 3. workflow of elevator remote control system

2.2.4. Remote monitoring system. During the normal operation of the elevator, the situation of elevator car can be learned at any time. When the elevator failure, installed in the elevator control cabinet linkage of data collector, signal alarm, report to the server at the same time, the field staff and remote control room can timely know which lifts malfunctioned, when failure happens, in order to take timely measures.

3. Implementation of the scheme

3.1. Circuit diagram of elevator control system

3.1.1. Elevator door open and closed system. The circuit diagram of elevator door open and closed system is shown in fig.4 Its functions are realized mainly through 51 MCU programming.

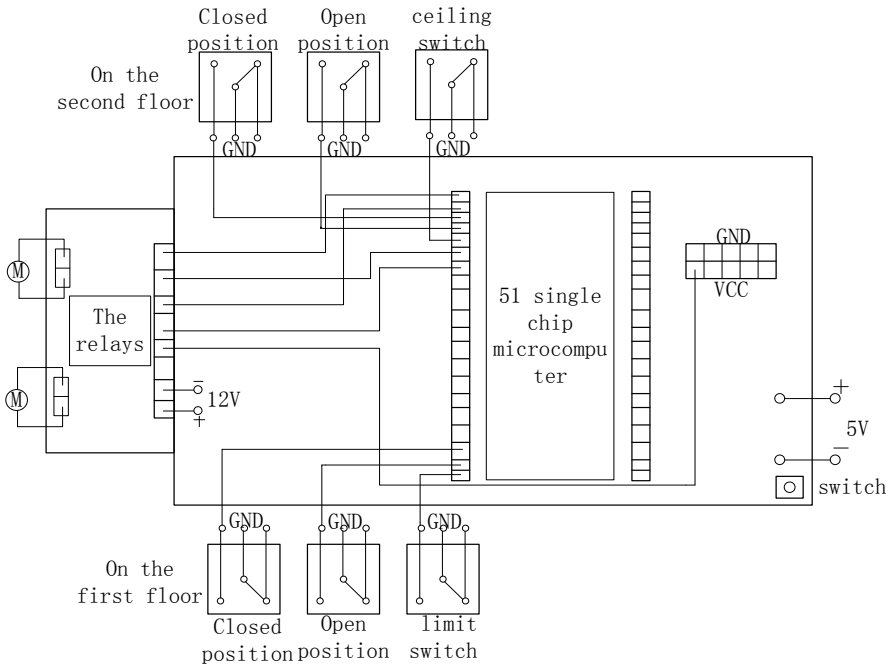

Figure 4. elevator door open and closed system

3.1.2. Speech control system. The circuit diagram of the speech control system is shown in fig.5. The voice module can be triggered when the door of the elevator is closed (that is, the elevator door closed on the first or second floor of the picture).

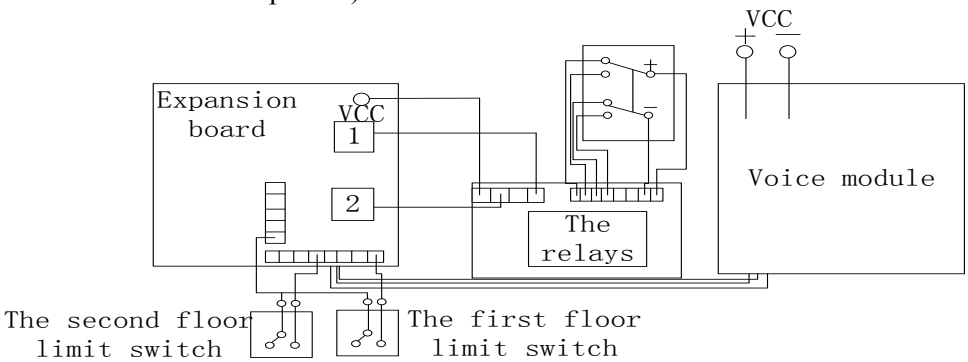

Figure 5. speech control system

3.1.3. Elevator remote control system. The circuit of the remote control system is shown in fig.6. Using the commonly used mobile terminal, the receiver's KD terminal can guide the motor, which drives the elevator cage up. When capsules up close to the second floor, close to the switch is closed, the feedback loop current launch, feedback to remote transmitters, make as shown in fig.7.

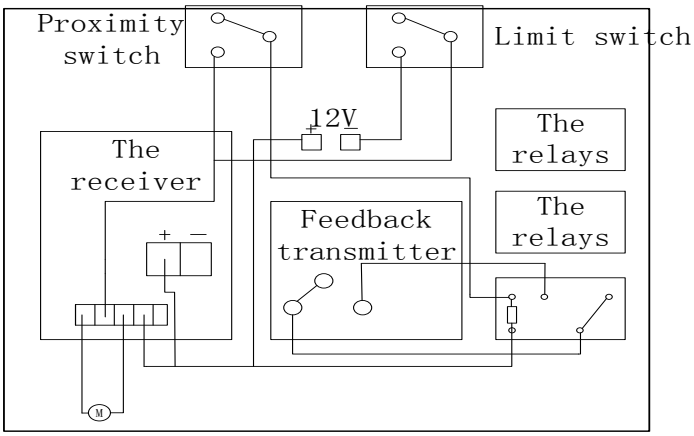

Figure 6. remote control system

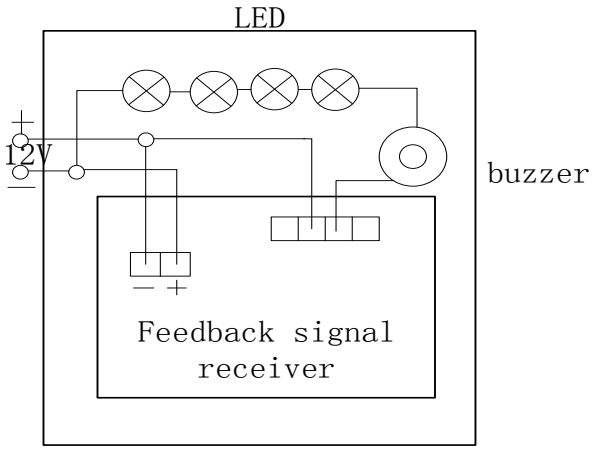

Figure 7. feedback system

3.1.4. Auxiliary manual control system. For the convenience of manual control model of the rise and fall of the elevator, manual control elevator lifting system is designed, and concatenated in the loop on the first floor limit switch and the limit switch on the second floor, circuit diagram is shown in fig.8.

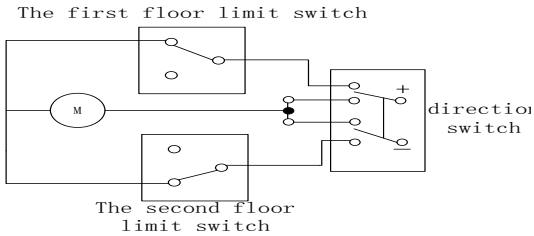

Figure 8. manually control elevator elevator circuit

3.1.5. Remote monitoring system. Realize the fault alarm, tiring rescue, daily management, quality assessment, hazard prevention functions such as integrated management platform, elevator is a kind of safety system based on Internet of things technology, as shown in fig.9.

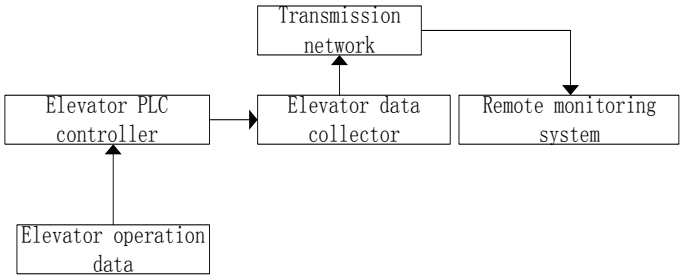

Figure 9. block diagram of remote monitoring system

4. Conclusion

The advantages of the system include: 1. The elevator door infrared sensor system and the floor selection speech control system can realize the full automatic control of the elevator. 2. The elevator infrared induction system can distinguish whether the user needs to take the elevator and avoid the invalid opening of the elevator door to realize the purpose of energy conservation. 3, voice control system of the trigger mode and other elevator speech control system, which can realize the doors close automatically trigger the voice control system, even if the first time to ride the elevator, the user can also easy to use, versatility is stronger; 4. By remote control, we can save valuable waiting time for users, so that users can wait at home to make it easy for users to travel. 5. Using the remote monitoring system, the safety and reliability of the elevator are increased, so that the user can be ensured in the elevator.

References

[1] STMicroelectronics.STM32F10xxx Reference manual,REV 9.June,2009:21-23.
[2] NXP Semiconductors.LPC17xx User manual.Rev00.06.June ,2009:68-70.
[3] Embedded Systems Conference Papers, San Francisco, 2001:65-68.
[4] N. Fragopanagos,and J. G.Taylor, “2005 Special Issue: Emotion recognition in human-computer interaction,” Elsevier Science Ltd. vol. 18, May 2005:389-405.
[5] R. Cowie, E. Douglascowie, N. Tsapatsoulis, G Votsis, and Votsis, “Emotion recognition in human-computer interaction,” IEEE Signal Processing Magazine, vol. 18, 2001:32-80.
[6] L. Malta, C. Miyajima, and K. Takeda, “Analysis of real-world driver's frustration,” IEEE Transactions on Intelligent Transportation Systems, vol. 12, Sept 2011:109-118.
[7] D. J. France, R. G. Shiavi, S. Silverman, M. Silverman, and D. M. Wilkes, “Acoustical properties of speech as indicators of depression and suicidal risk,” IEEE Transactions on Bio-Medical Engineering, vol. 47, 2000:829-837.
[8] Wei Kongping, roni. Elevator technology [M]. Beijing: chemical industry press, 2006.6:56-58.
[9] zhu devan. Intelligent control and application of elevator traffic system [M]. Changchun:Jilin university press, 2002:17-19.