PLC-Based Intelligent Control System for Four-Floor Elevator

Mabia Khatun[1], Md. Ariful Islam[2], Merina Akter[3]

[1]*Masters of Electrical Engineering, Anhui University of Science and Technology, Anhui, China*
[1]*Masters of Mechanical Engineering, Changan University, xian, China*
[2]*Masters of Computer Science and Technology, Changan University, xian, China*

Abstract: *Elevators are essential for moving people and goods in multi-story buildings; however, traditional relay-based controls are prone to wear and have inflexible designs. This paper presents a PLC-based control system for a four-floor elevator that improves its functionality and maintainability. Using the Siemens TIA Portal, we developed ladder logic (LD) and function block diagram (FBD) programs to manage car calls, hall calls, motion scheduling, and door operations. The system offers automatic and manual modes with safety interlocks for the overload and door obstruction. This modern PLC implementation significantly reduces wiring complexity, enhances expandability, and increases reliability compared with conventional relay systems.*

Key words: Programmable Logic Controller (PLC), Ladder Logic, Elevator, Function Block Diagram, Automation, Industrial Control.

1 Introduction

Elevators are vital for efficient vertical transportation in modern high-rise buildings. As structures grow taller and more complex, the demand for reliable and flexible elevator systems increases. Historically, elevator controls have relied on hardwired relay circuits, which are prone to mechanical wear, failures, and limited functionality. For example, the John Hancock Center in Chicago, one of the tallest skyscrapers in the U.S., uses 50 Otis-manufactured elevators, including high-speed express cars that travel up to 1,800 ft/min (≈9.1 m/s) [1], [2]. Achieving safe and efficient operation at such speeds is difficult for relay-based systems. In contrast, Programmable Logic Controllers (PLCs) are the industry standard for industrial automation because of their robustness and reprogrammability [3]. Unlike fixed relays, PLC programs can be updated in software, making them more flexible and easier to modify than fixed relays. Moreover, PLCs are designed to tolerate harsh environments (dust, moisture, and temperature extremes) while offering extensive input/output (I/O) connectivity [3].

This study applied a PLC to control a four-floor elevator system, achieving intelligent operation by managing car and hall calls, determining motion direction, and controlling doors and safety interlocks [10]. The PLC implements collective call scheduling, which is a standard elevator strategy that groups and sequences requests in the direction of travel [11]. This functionality is cumbersome with relays but is straightforward in software. The objectives of the project are twofold: (1) to design a complete system architecture (hardware and software) that meets all functional requirements, and (2) to develop detailed PLC programs and wiring for implementation. The result is a flexible and reliable four-floor elevator control system that outperforms traditional relay-based designs.

2. PLC Architecture and Control Strategy

The PLC-based elevator control system integrates various hardware modules and logic routines to ensure smooth, efficient operation. The PLC interfaces with floor sensors, call buttons, motors, door actuators, and safety devices, forming the core control system.

2.1 PLC Hardware Components

A typical PLC system comprises a rack or chassis that holds several modules: a power supply, a CPU (processor) module, I/O signal modules, and optional communication or specialty modules. Figure 1 illustrates the modular rack-mounted PLC configuration. In our case, we used a Siemens SIMATIC S7-1200 series CPU and the corresponding power/I/O modules. For example:

PLC hardware conponents:

- **Power Supply:** Mounted in the leftmost rack slot, it converts AC mains to +24 VDC and distributes power to all modules via the backplane.

- **CPU:** The brain of the system (e.g. Siemens SIMATIC CPU 1215C) contains a processor, ROM, and RAM. It executes the user control program.
- **I/O Modules:** Interface cards for digital and analogue inputs/outputs. Digital inputs connect sensors and buttons to the PLC, and digital outputs drive actuators (motors, relays, and lamps).
- **Communication Module (CP):** For example, an Ethernet interface allowing connection to an HMI (Human-Machine Interface) or higher-level systems.

Fig. 1 shows the arrangement of these modules on the PLC backplane. The power module fed the CPU and I/O modules with +24 VDC. Input modules scan external signals (buttons, switches, and sensors) and send them to the CPU, whereas output modules send control signals (e.g. motor up/down and door open) to external devices. The CPU was programmed via a PC using an Ethernet link. This modular design allows easy expansion; adding more floors simply requires additional I/O modules and program adjustments [9].

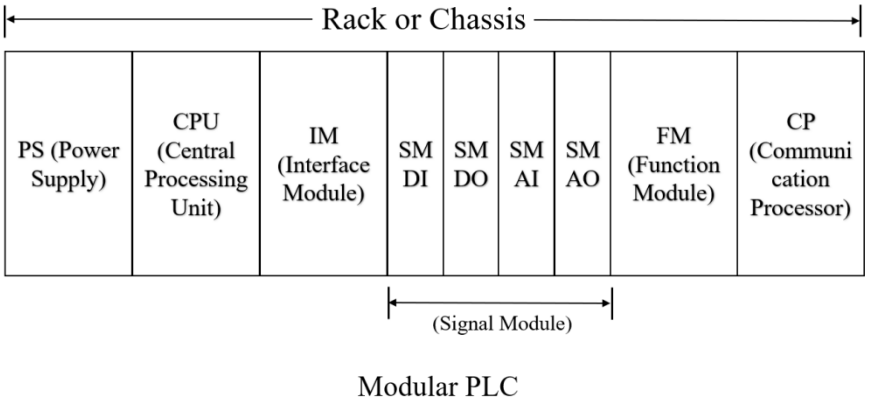

Fig. 1 Rack-Mounted Modular PLC System Architecture

2.2 Control Logic Strategy

The PLC program implements all elevator control logics, processes the inputs, and drives the outputs accordingly. The system is connected to the following components:

- **Car Motor:** Two outputs control the drive motor direction (Up and Down). Each output energises a relay/contactor for the upward or downward motion.
- **Door Actuators:** OOne output controls the door mechanism (opening and closing of both cabin and landing doors).
- **Floor Sensors:** Each floor has a sensor (limit switch) that signals the car's arrival; these reset the current floor variable in the PLC.
- **Obstruction Sensor:** A sensor at the door detects whether the doorway is blocked, inhibiting door closing.
- **Overload Sensor:** A weight (load) sensor in the cabin signals if the car is overloaded; if true, the program disallows motion until cleared.
- **Car Call Buttons (Inputs):** Inside the cabin, there is a push button for each floor. Pressing one latches a car-call request to the system.
- **Hall Call Buttons (Inputs):** On each landing, Up and/or Down call buttons set hall-call requests in PLC.

The PLC logic maintains a state machine that processes these inputs and controls the outputs. Key features include:

- **Collective Call Scheduling:** When moving in one direction, the elevator serves all requests in that direction before reversing. For example, if the car is travelling up and there are pending requests above the current floor, it continues

upward until they are cleared and then changes direction. This single-direction priority is efficient and standard in modern elevator systems.

- **Direction State Machine:** The program has three states: Ascending, Descending, and Stopped. Transitions depend on pending calls and the current state. For instance, if there are ascending and no further up-calls exist above, the car transitions to Stopped, pauses, and then checks for down-calls. From Stopped, it chooses a new direction based on pending requests above or below the current position. This strategy avoids abrupt reversals and ensures that all calls are eventually served

- **Door Control:** When the car arrives at the requested floor (detected by a floor sensor), the PLC opens the doors for a fixed interval. If the obstruction sensor is triggered during closing, the PLC reopens the door and waits until the obstruction is cleared before resuming closing. This prevents the doors from closing passenger doors.

- **Safety Interlocks:** If the overload sensor is active, any motion commands are inhibited. Similarly, if any unsafe condition is detected, the program ignores the drive commands to prevent accidents.

In our implementation, the PLC program was developed in the Siemens TIA Portal using Ladder Logic (LD) and Function Block Diagram (FBD) languages [4]. All I/O points were assigned in the software to match the physical wiring. The flowchart of the state machine (Fig. 4) and the logical relationships are encoded in the networks of ladder rungs. For example, a rung may energise the Up motor coil only when an up request exists and no higher requests remain. This logic ensures that at most one drive output (Up or Down) is active at a time and that safety signals (overload, door obstruction) immediately disable the motors.

Combined, the PLC hardware and software form a complete elevator controller for four floors of the building. The modular architecture makes it straightforward to add floors by including more I/O modules and adjusting the program's addressing.

3. Hardware Design

This section details the specific hardware setup for the four-floor elevator and the I/O-point assignments. Our lab-scale system (or simulation) includes a traction motor with a pulley, car and landing doors, and floor sensors. The PLC's outputs drive the motor and doors, and the inputs read the sensor and button signals. In this design, two digital outputs control the motor's Up and Down relays, and one output controls the door open/close actuator. Digital inputs include one floor sensor per floor (detecting car arrival), an overload sensor, and a door obstruction sensor [10]. Car-call and hall-call buttons were also wired as inputs.

Table 1 shows a sample PLC I/O address mapping for our four-floor elevator.

PLC Address	Description	Type
I0.0	Floor 1 sensor (at 1st floor)	Input
I0.1	Floor 2 sensor	Input
I0.2	Floor 3 sensor	Input
I0.3	Floor 4 sensor	Input
I0.4	Car-call Button Floor 1 (inside)	Input
I0.5	Car-call Button Floor 2	Input
I1.0	Hall-call Up (1st floor)	Input
I1.1	Hall-call Down (2nd floor)	Input
Q0.0	Motor Up output	Output
Q0.1	Motor Down output	Output
Q0.2	Door Open/Close output	Output
Q0.3	(Spare)	Output

Figure 2 shows the I/O wiring diagram of the elevator system. It shows how the PLC input channels (I0.0–I1.1) connect to the floor sensors and call buttons (which supply +24 V to the PLC when activated) and how the PLC outputs (Q0.0–Q2.7) drive lamps and actuators. The outputs control indicator lamps for each floor (L1–L4), direction indicators (UP/DOWN), and hall-call lamps (UP1–UP3, DN2–DN4) are controlled. Each output sinks or sources +24 V to the respective device. A single 24 V DC power supply fed both the inputs and outputs (with common rails of 1M for inputs and 2M for outputs). For example, when floor sensor S2 (I0.2) is triggered, the PLC energises floor-2 lamp L2 (on Q0.2) and landing-call lamp SL2 (on Q2.0). This wiring diagram ensures that the elevator direction, arrival, and call signals are processed efficiently. Technicians use this diagram to wire each device to the correct PLC terminal, thereby enabling the accurate control of the elevator operation [8].

Fig. 2. I/O wiring diagram for the four-floor elevator, showing connections from sensors and buttons to PLC inputs and from PLC outputs to motors, doors, and indicator lamps.

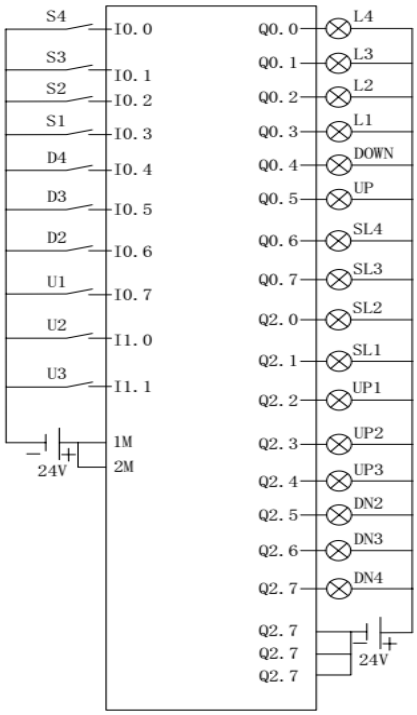

Fig. 2 I/O Wiring Diagram for Elevator System

The chosen PLC hardware was a Siemens SIMATIC S7 series (S7-1200) in a 9-slot rack (Fig. 3). A Siemens KTP700 colour HMI panel provided the operator interface (not shown). In our setup, the modules (power supply, CPU, and I/O) were mounted in the rack as per the addressing in Table 1.

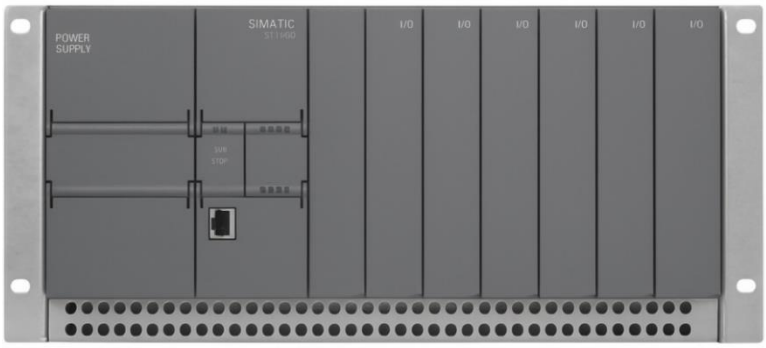

Fig. 3. Rack-Mounted PLC Chassis (9-Slot Siemens Configuration)

Fig. 3. 9-slot rack-mounted PLC chassis (backplane) used in industrial controllers. The power supply, CPU, and I/O modules are plugged into the slots on the backplane. In our setup, a Siemens SIMATIC PLC and I/O modules were mounted similarly.

In the hardware wiring, each elevator input device (call button or sensor) is connected to a unique PLC input terminal, and each actuator coil (motor Up, motor Down, and door actuator) is connected to a PLC output terminal. Special safety signals (overload and obstruction) are wired to dedicated inputs that immediately disable motion outputs when activated. All the interconnection diagrams followed the standard PLC wiring practices. The PLC program's I/O addressing is then set so that each physical terminal maps to the intended variable (for example, I0.0 = 1st-floor sensor, Q0.0 = Motor Up coil). This mapping ensures that when the PLC sets Q0.0, the elevator car moves upward.

4. Software Design

The elevator control logic was implemented in the Siemens TIA Portal using the Ladder Logic (LD) and Function Block Diagram (FBD) programming languages. These graphical languages allow the PLC to react dynamically to input signals, maintain the state, and drive outputs. The overall software design included routines for call processing, motion control, door control, and safety checks.

4.1 Ladder Logic Design

The core control logic is implemented as a state machine with three primary states: Ascending, Descending, and Stopped (Fig. 4). The PLC continuously monitors the current floor, pending car and hall calls, and the current motion direction. Based on these conditions, the system transitions between states to operate the elevator efficiently. For instance, when a car-call or hall-call button is pressed, the PLC latches the request and processes it by prioritizing the calls in the current direction of travel. The elevator serves all calls above it before reversing, ensuring energy-efficient operation. Once no calls remain in the current direction, the logic transitions to stopped and then to the opposite direction, if needed.

Fig. 4. Elevator control flowchart showing the Ascending, Descending, and Stopped states and transitions.

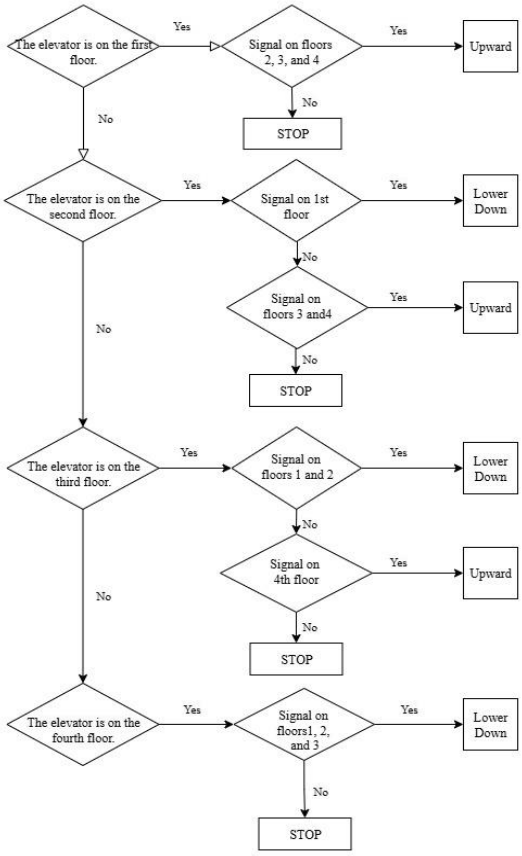

Fig. 4 Elevator Ascending and Descending flow chart

During motion, the PLC activates the appropriate Motor Up output: in the ascending state, Q0.0 (Motor Down) is energized if any up-requests exist above the car; in the descending state, Q0.1 (motor down) is energized if any down-requests exist below. Q0.0 and Q0.1 were never active simultaneously. When the car is in the stopped state (e.g., doors opening), both motor outputs are off.

4.2 Door Control

The door control subsystem ensures that the doors operate safely at each stop (Fig. 5). When the car arrives at the requested floor (indicated by a floor sensor), the PLC triggers Q0.2 to open the doors for a fixed dwell time (e.g., 3 s). After the interval, the PLC signals the door to close. If the obstruction sensor becomes active during closing, the program reopens the doors and restarts the closing timer, preventing the doors from closing on any obstruction [5]. Doors only open if there is a valid request for that floor and remain closed otherwise.

Fig. 5. Door operation flowchart. The doors open upon arrival at the requested floor. If an obstruction is detected, the door reopens and waits until the path is clear before closing.

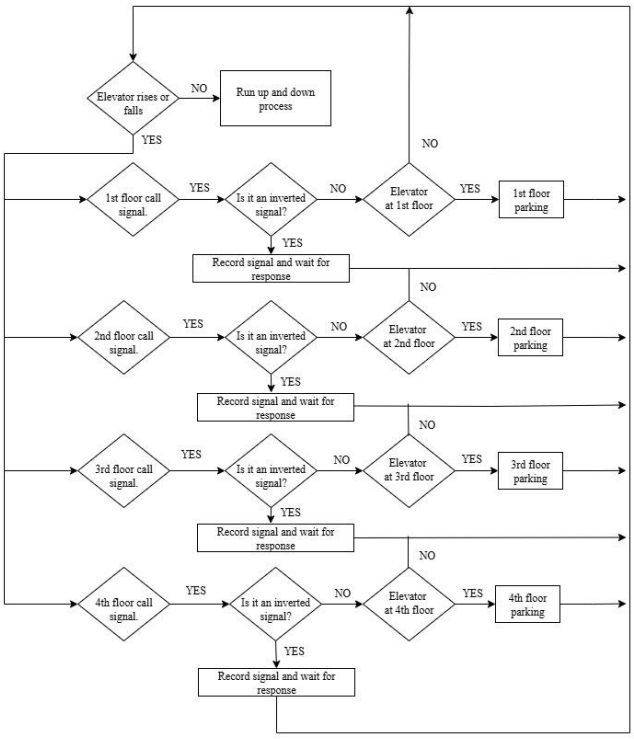

Fig. 5 Door operation flow chart

4.3 Main Ladder Networks

Primary ladder logic networks perform the following tasks:

- **State monitoring:** Detects the current motion state (Up, Down, Stopped) and floor arrival via sensors. When the car reaches the requested floor, the door-control routine is triggered.
- **Call Handling:** Latch car-call and hall-call inputs. The logic scans the pending requests in the current direction of travel.
- **Direction Control:** Decide when to continue moving, stop, or reverse. All calls in the current direction are served before the direction is changed.
- **Output Control:** Energize Q0.0 (up motor) when ascending or Q0.1 (down motor) when descending, based on pending requests. In the Stopped state or during door opening, both motor outputs are off.

- **Door and Safety:** When a floor is reached, Q0.2 is activated to open doors for the set interval (Fig. 5). During door opening, the motor outputs are disabled. If an obstruction is detected, the doors are reopened, and the closing timer is restarted. If the overload input is true, the motor outputs are inhibited until the condition clears [5].

During testing, the PLC program correctly managed various call sequences, ensuring that the elevator stopped smoothly at all requested floors. The ladder logic was compact and easy to debug for this discrete control task [6]. Any future changes (e.g., adjusting door-openingopen time or adding an extra floor) would require only software updates rather than hardware rewiring.

PLC Ladder Diagram of the Elevator Control:

Figure 6 illustrates the ladder logic used to control the four-floor elevator system. The diagram includes key functional blocks, such as floor call registration, call reset, direction control (up/down), door control, elevator movement control, floor indication, and safety interlocks. Each rung of the ladder corresponds to a specific operation. For example, when a car-call or hall-call button is pressed, the input is latched and stored in a memory register for future reference. The program then evaluates the current state and activates either the Up or Down motor (Q0.0 or Q0.1), depending on the requested direction. Simultaneously, the floor sensors updated the car's position, and the door output (Q0.2) was triggered upon arrival. The ladder logic ensures that only one directional output is active at any time and checks for overload and obstruction conditions before allowing motion. The structure of this diagram helps visualize and validate the program flow, making it easy to troubleshoot and modify the program.

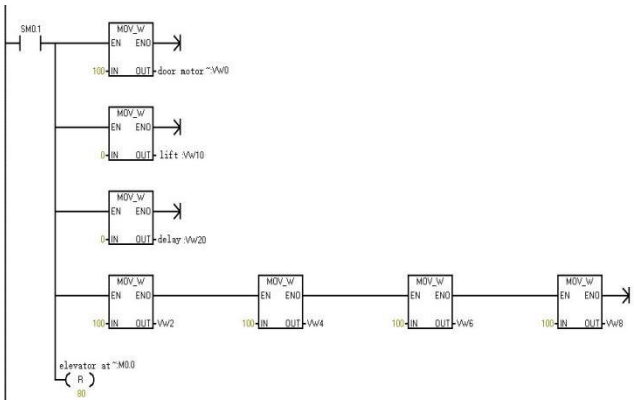

Floor Call Registration

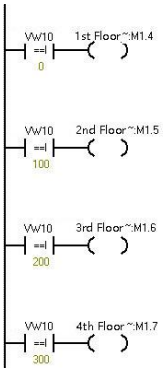

Call Reset

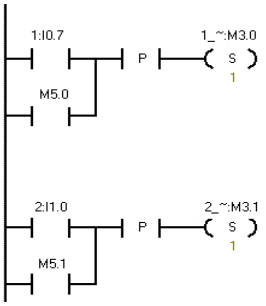

Call Handling

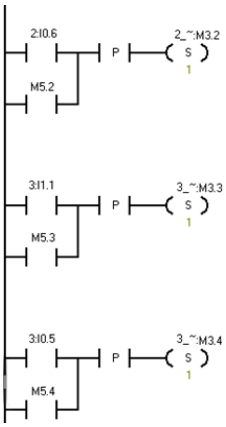

Elevator Movement Control

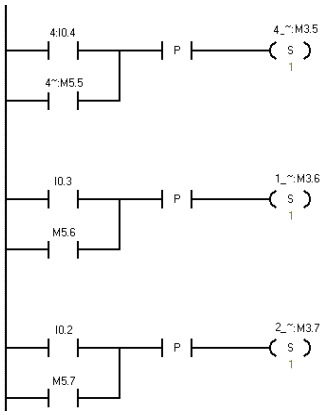

Door Control

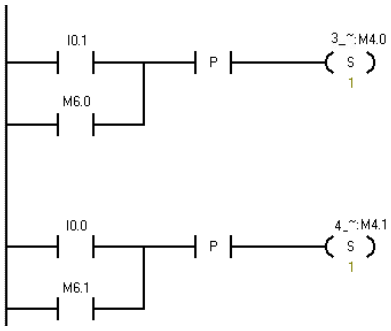

Direction Control (up/down)

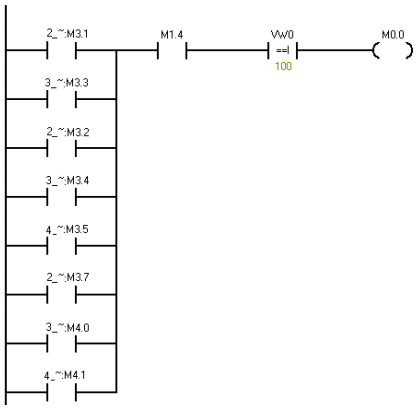

Floor Indicator

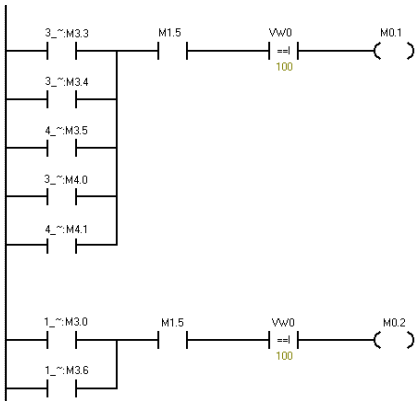

Safety Interlock

Fig. 6 PLC Ladder Diagram

5. Implementation and Testing

PLC-based control was validated by simulating various call scenarios in the TIA Portal environment. In one test, the car-call buttons for floors 1, 3, and 4 were pressed. Starting from floor 1, the elevator ascended, stopped at floor 3 to open the doors, and then proceeded to floor 4. In another test, hall-call Up on floor 2 and hall-call Down on floor 4 were entered; the elevator moved up from 1 to 2, then reversed direction and stopped at 4. In all scenarios, the doors opened for the programmed interval at each stop, and the simulated obstruction or overload signals were handled correctly (doors reopened or motion halted) [7].

The system operated efficiently and without errors. Ladder logic programming maintains the control logic organized and is easy to troubleshoot. Any modification to the logic (for example, changing door timings or adding another floor) only requires editing the program, not rewiring. Overall, the PLC-controlled elevator met all the design specifications and demonstrated higher reliability and flexibility than a comparable relay-based system.

Conclusion

This study demonstrates a PLC-based intelligent control system for a four-floor elevator, which replaces the traditional hardwired relay logic. The resulting system offers enhanced reliability, flexibility, and improved maintainability. Using ladder logic and function-block diagrams, the PLC program was compact and easy to debug, which simplified future modifications and expansion. In a lab-scale simulation, the system performed as expected. In future work, the design could be scaled to more floors or augmented with features such as predictive maintenance or remote monitoring. PLC-based elevator controls provide significant advantages for modern buildings because of their scalability, ease of modification, and robustness against harsh conditions.

References

[1] G. Shi (ed.), *Electrical Control and Programmable Controller Technology*. Beijing, China: Chemical Industry Press, 2012.

[2] G. Yu, *Principles and System Design of Programmable Controllers*. Beijing, China: Tsinghua University Press, 2004.

[3] Q. Wu, *Practical Guide to Integrated Application Technology of Inverter, Programmable Controller and Touch Screen*, 2nd ed. Beijing, China: China Machine Press, 2010.

[4] G. Shi and Y. Ju, *Electrical Control and Programmable Controller Technology Training Course*. Beijing, China: Chemical Industry Press, 2010.

[5] Y. Li, "Design of Remote Intelligent Monitoring System for Traffic Intersection Signals Based on GPRS and PLC," M.S. thesis, Inner Mongolia Univ. of Sci. & Tech., 2012.

[6] L. Xu, "Application of FluidSIM Simulation Software in the Teaching of Electromechanical Equipment Installation and Commissioning Course," Dissertation, Nanjing Vocational & Technical College of Mech. & Elec. Eng., 2017.

[7] P. Zhao and H. Jing, "Design of Traffic Light Monitoring System Based on PLC," M.S. thesis, Yulin Univ., 2016.

[8] X. Zhang, "Complex Traffic Light Control System Based on S7-200," M.S. thesis, Xianyang Normal Univ., 2010.

[9] Y. Cui, "Application of PLC Technology in 'Crossroads Traffic Light Control'," Thesis, Fularji Branch, Heilongjiang Radio & TV Univ., 2011.

[10] H. Li, *Elevator Control Technology*. Beijing, China: China Machine Press, 2002.

[11] "Programmable logic controller," *Wikipedia, The Free Encyclopedia*. [Online]. Available: https://en.wikipedia.org/wiki/Programmable_logic_controller (accessed July 2025).

BIOGRAPHIES

Mabia Khatun received the Bachelor's Degree in Electrical Engineering form Nanjing University of Information Science and Technology, Jiangsu, China. She is currently pursuing Master's degree in Electrical Engineering from the Anhui University of Science and Technology, Anhui, China. Her current research interests include, PLC-based elevator controls, Bayesian Optimization Machine Learning, DC-DC Circuits, Soft Fault. She can be contacted at email: mabiakhatun.njpichina@gmail.com.

Md. Ariful Islam received the Bachelor's Degree in Electrical Engineering form Nanjing University of Information Science and Technology, Jiangsu, China. He is currently pursuing Master's degree in Mechanical Engineering from the Changan University, Xian, China. His current research interests include, Research on the Compilation Method of Transmission Shaft Load Spectrum for ZL50 Wheel Loader Used in Mines. He can be contacted at email: arifkhan271848@gmail.com.

Merina Akter received the Bachelor's Degree in Software Engineering form Jiangsu Normal University, Jiangsu, China. She is currently pursuing Master's degree in Computer Science & Technology from the Changan University, Xian, China. Her current research interests include, Data Science and Artificial Intelligence for Ethical and Scalable AI Solutions. She can be contacted at email: merinahawla1999@gmail.com.