2026 03 26
발표 자료

광운대학교 로봇학과
FAIR Lab

김한서

KWANGWOON
UNIVERSITY

이번 주 진행사항

- VPNet
  - 논문 리뷰
  - 재현 실험

VPNet

FAIR Lab

KWANGWOON UNIVERSITY

ARE GLOBAL DEPENDENCIES NECESSARY? SCALABLE TIME SERIES FORECASTING VIA LOCAL CROSS-VARIATE MODELING

Kun Liu[1], **Renjun Jia**[2], **Ruifeng Yang**[1], **Xirui Zeng**[1], **Yuqi Liang**[3], **Cen Chen**[1*]
[1]East China Normal University, [2]Tongji University, [3]Seek Data Group, Emoney Inc.
51265900028@stu.ecnu.edu.cn, cenchen@dase.ecnu.edu.cn

- 인용 수: 0회(Google Scholar, 2026-03-24)
- Published at ICLR 2026
- 링크:https://openreview.net/pdf?id=CNVL194fO5

VPNet

FAIR Lab

KWANGWOON UNIVERSITY

Background

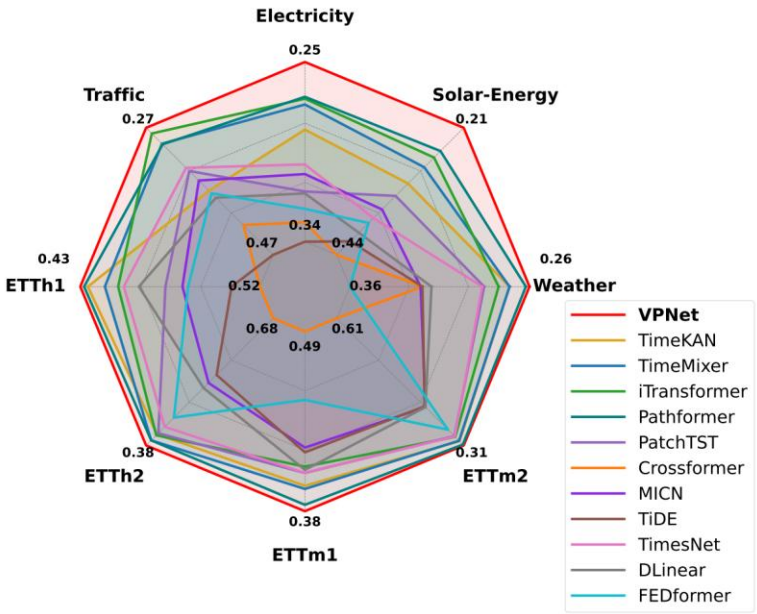

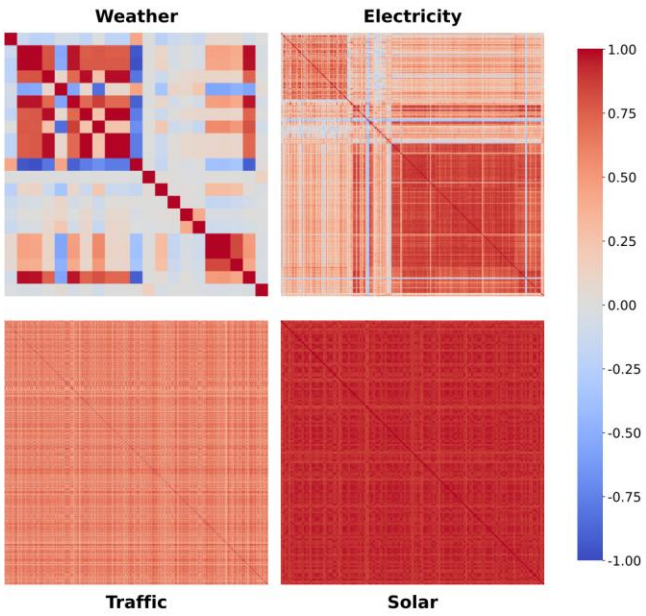

- 기존 Attention 방식의 Global Dependency를 모델링하는 과정에서 생기는 연산 복잡도 문제를 VPNet의 Depthwise Conv를 통해 지역적인 변수, 패치 간 상호작용만 모델링하여 문제를 해결하였음
- 인접 변수 간의 모델링만으로도 전역적 정보를 충분히 포착이 가능하다는 것을 실험을 통해 입증

VPNet

FAIR Lab

KWANGWOON UNIVERSITY

모델 구조

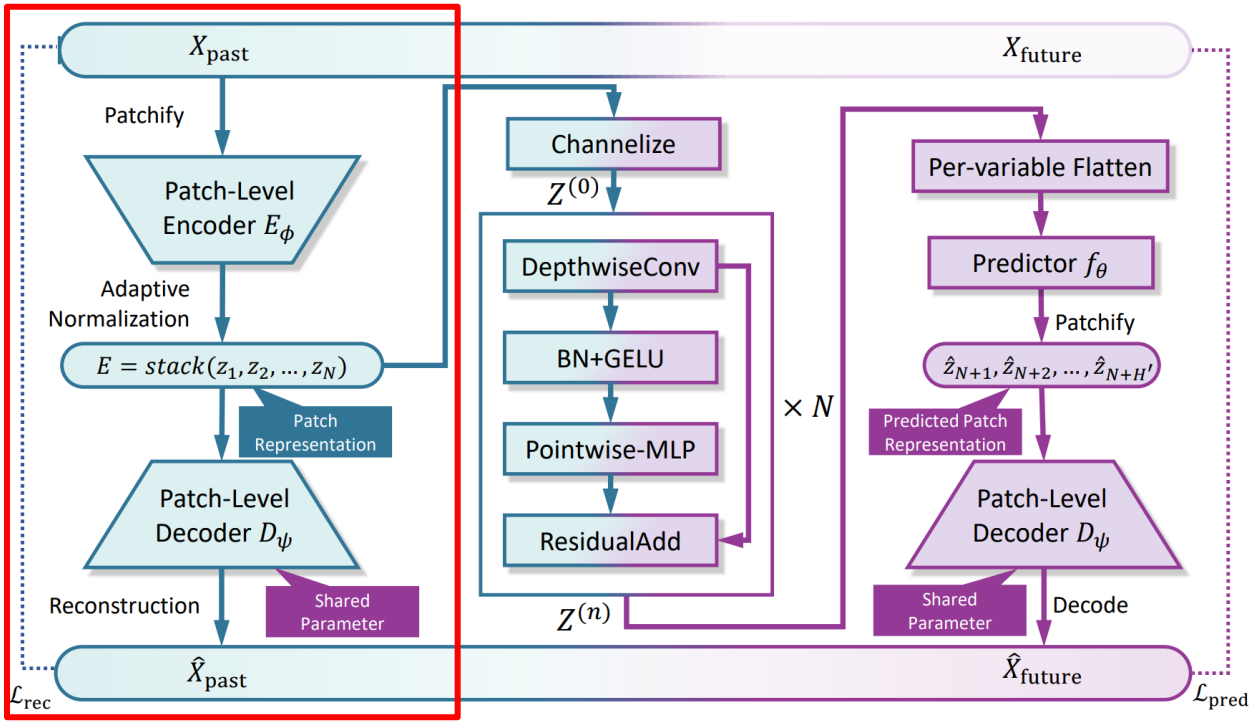

- Patchify & Patch-Level Overcomplete Autoencoder
  - 과거 시계열 데이터를 일정 길이의 Patch로 나눈 뒤, Encoder를 통해 고차원 벡터인 Patch Embedding으로 변환
- Adaptive Normalization & Patch-Level Decoder
  - Patch Embedidng 정규화 후 Representation을 쌓아서 $E \in \mathbb{R}^{B \times C \times P \times H}$생성, Decoder를 통해 Patch 복원 후 과거 시계열 데이터를 재구성

VPNet

FAIR Lab

KWANGWOON UNIVERSITY

Variate-Patch Field

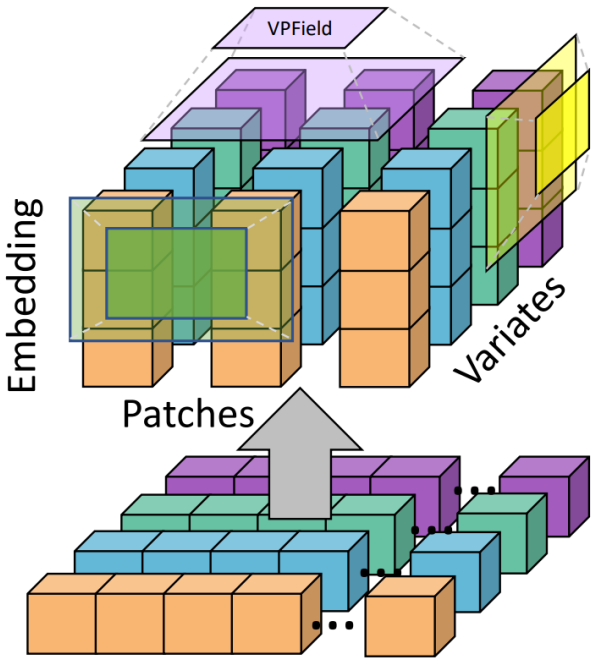

- DepthwiseConv 연산을 위해 기존 $E \in \mathbb{R}^{B \times C \times P \times H}$에서 $Z^{(0)} = Permute(E) \in \mathbb{R}^{B \times H \times C \times P}$로 차원 변경

세로 축을 변수, 가로 축을 Patch, 채널 축을 Embedding 특징값으로 하여 시계열 구조에서 이미지 구조처럼 변경

노란색 평면: 원본 시계열 데이터에 직접 Convolution 적용하는 방식

초록색 평면: 각 변수들을 주파수에 따라 2차원 평면으로 재구성하여 연산

보라색 평면: 변수 $\times Patch$ 그리드로 구성된 Field

VPNet

FAIR Lab

KWANGWOON UNIVERSITY

모델 구조

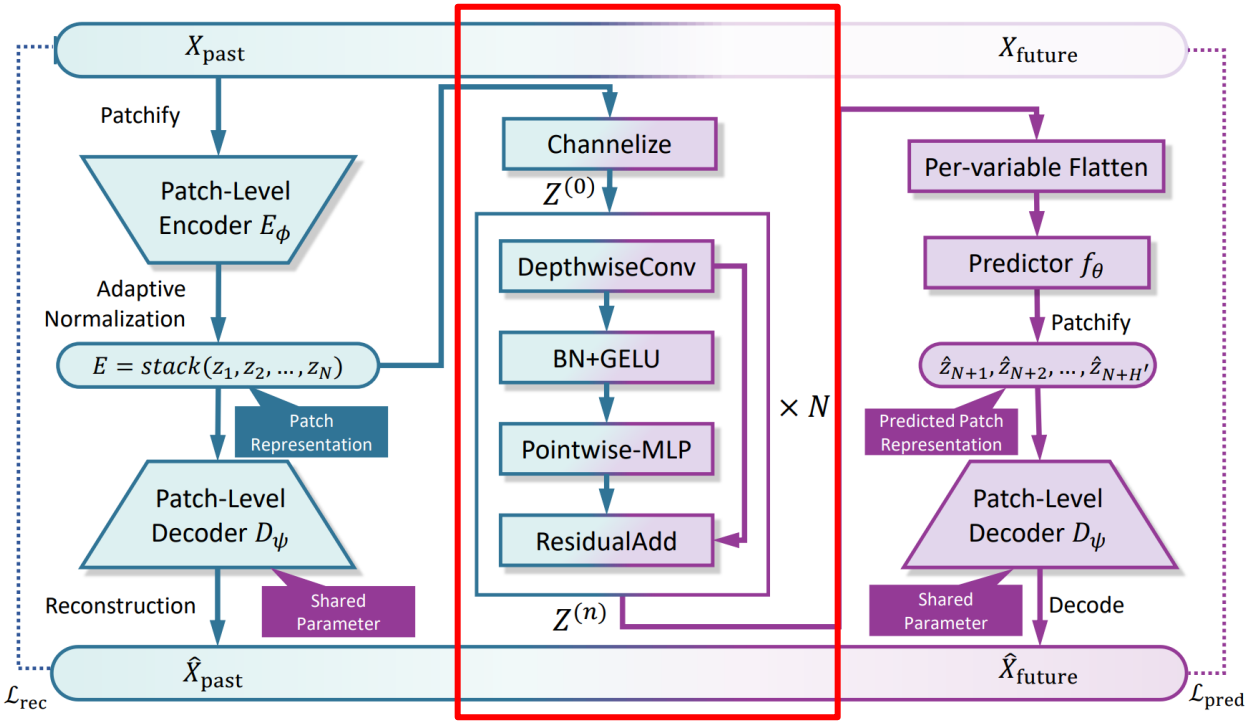

- Channelize
  - $E \in \mathbb{R}^{B \times C \times P \times H}$을 입력하고, 차원을 Permute하여 $Z^{(0)} = Permute(E) \in \mathbb{R}^{B \times H \times C \times P}$ 형태의 Variate-Patch Field 생성
- DepthwiseConv & Pointwise-MLP
  - 채널 층마다 독립적인 커널을 사용해 변수 간 상관관계와 지역적 패턴 추출
  - 각 임베딩 차원을 4배로 확장시키면서 서로 다른 임베딩 층의 특징값들을 Mixing, 이후 원래 크기로 압축

VPNet

FAIR Lab

KWANGWOON UNIVERSITY

모델 구조

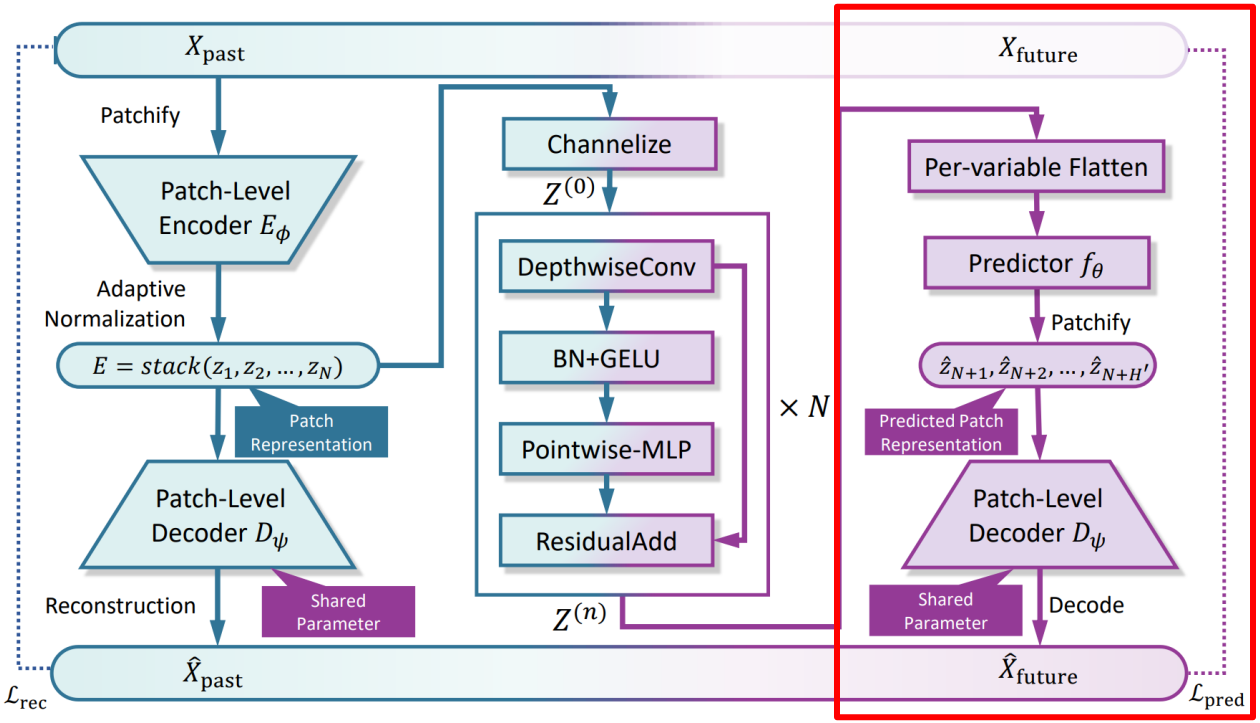

- Per-variable Flatten
  - VarTCNBlock을 거친 $Z^{(n)}$를 입력하여 각 변수별로 Flatten $u_{b,c} = vec\left(Z^{(N)}_{b,c,:,:}\right) \in \mathbb{R}^{\mathbb{HP}}$
- Patch-Level Decoder
  - 각 Patch 구간을 Decoder를 통해 시계열로 변환하게 되고, 이후에 concat하여 미래 시계열 데이터 생성

$u_{b,c}$: 변수별 특징 벡터
vec: Flatten 연산
$Z^{(N)}_{b,c,:,:}$: N번의 블록을 통과한 최종 Tensor에서 b번째 샘플과 c번째 변수에 해당하는 부분

VPNet

FAIR Lab

KWANGWOON UNIVERSITY

모델 구조

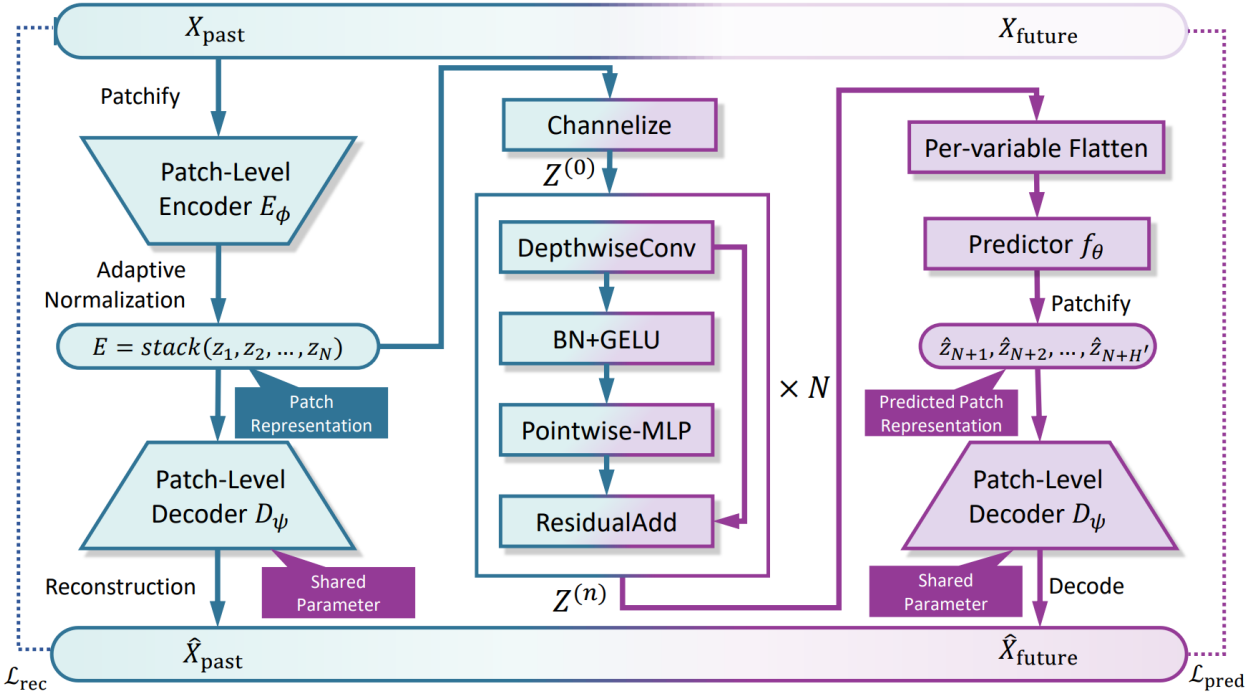

- Loss 계산
  - $\mathcal{L}_{pred} = \frac{1}{BSC}\sum_{b=1}^{B}\sum_{t=1}^{S}\sum_{c=1}^{C}|\widehat{Y_{b,t,c}} - Y_{b,t,c}|_1$

    $\mathcal{L}_{rec} = \frac{1}{B \cdot L \cdot C}\sum_{b=1}^{B}\sum_{t=1}^{L}\sum_{c=1}^{C}\left|\widehat{X_{b,t,c}} - X_{b,t,c}\right|_1$

    $\mathcal{L}_{total} = \mathcal{L}_{pred} + \mathcal{L}_{rec}$

B: 배치 크기
S: 예측 기간
C: 변수 개수
P: 패치 개수
$|\cdot|_1$: L1 Norm 연산

VPNet

FAIR Lab

KWANGWOON UNIVERSITY

주요 모델 성능 비교

Models		**VPNet (Ours)**		TimeKAN (2025)		TimeMixer (2024a)		iTransformer (2024a)		Pathformer (2024)		PatchTST (2023)		Crossformer (2023)		MICN (2023)		TiDE (2023)		TimesNet (2023a)		DLinear (2023)		FEDformer (2022)	
Metric		MSE	MAE	MSE	MAE	MSE	MAE	MSE	MAE	MSE	MAE	MSE	MAE	MSE	MAE	MSE	MAE	MSE	MAE	MSE	MAE	MSE	MAE	MSE	MAE
Weather	96	0.157	**0.192**	0.162	0.208	0.163	0.209	0.174	0.214	**0.156**	**0.192**	0.186	0.227	0.195	0.271	0.198	0.261	0.202	0.261	0.172	0.220	0.195	0.252	0.217	0.296
	192	0.207	**0.239**	0.207	0.249	0.208	0.250	0.221	0.254	**0.206**	0.240	0.234	0.265	0.209	0.277	0.239	0.299	0.242	0.298	0.219	0.261	0.237	0.295	0.276	0.336
	336	0.258	**0.281**	0.263	0.290	**0.251**	0.287	0.278	0.296	0.254	0.282	0.284	0.301	0.273	0.332	0.285	0.336	0.287	0.335	0.280	0.306	0.282	0.331	0.339	0.380
	720	**0.330**	**0.333**	0.338	0.340	0.339	0.341	0.358	0.347	0.340	0.336	0.356	0.349	0.379	0.401	0.351	0.388	0.351	0.386	0.365	0.359	0.345	0.382	0.403	0.428
	Avg	**0.238**	**0.261**	0.243	0.272	0.240	0.272	0.258	0.278	0.239	0.263	0.265	0.286	0.264	0.320	0.268	0.321	0.271	0.320	0.259	0.287	0.265	0.315	0.309	0.360
Solar-Energy	96	**0.177**	**0.178**	0.234	0.290	0.189	0.259	0.203	0.237	0.202	0.225	0.265	0.323	0.232	0.302	0.257	0.325	0.312	0.399	0.373	0.358	0.290	0.378	0.286	0.341
	192	**0.196**	**0.206**	0.274	0.309	0.222	0.283	0.233	0.261	0.235	0.245	0.288	0.332	0.371	0.410	0.278	0.354	0.339	0.416	0.397	0.376	0.320	0.398	0.291	0.337
	336	**0.216**	**0.219**	0.299	0.324	0.231	0.292	0.248	0.273	0.272	0.272	0.301	0.339	0.495	0.515	0.298	0.375	0.368	0.430	0.420	0.380	0.353	0.415	0.354	0.416
	720	0.228	**0.225**	0.295	0.318	**0.223**	0.285	0.249	0.275	0.255	0.256	0.295	0.336	0.526	0.542	0.299	0.379	0.370	0.425	0.420	0.381	0.357	0.413	0.380	0.437
	Avg	**0.204**	**0.207**	0.276	0.310	0.216	0.280	0.233	0.262	0.241	0.250	0.287	0.333	0.406	0.442	0.283	0.358	0.347	0.417	0.403	0.374	0.330	0.401	0.328	0.383
Electricity	96	**0.135**	**0.224**	0.174	0.266	0.153	0.247	0.148	0.240	0.145	0.236	0.190	0.296	0.219	0.314	0.180	0.293	0.237	0.329	0.168	0.272	0.210	0.302	0.193	0.308
	192	**0.151**	**0.239**	0.182	0.273	0.166	0.256	0.162	0.253	0.167	0.256	0.199	0.304	0.231	0.322	0.189	0.302	0.236	0.330	0.184	0.322	0.210	0.305	0.201	0.315
	336	**0.166**	**0.257**	0.197	0.286	0.185	0.277	0.178	0.269	0.186	0.275	0.217	0.319	0.246	0.337	0.198	0.312	0.249	0.344	0.198	0.300	0.223	0.319	0.214	0.329
	720	**0.196**	**0.284**	0.236	0.320	0.225	0.310	0.225	0.317	0.231	0.309	0.258	0.352	0.280	0.363	0.217	0.330	0.284	0.373	0.220	0.320	0.258	0.350	0.246	0.355
	Avg	**0.162**	**0.251**	0.197	0.286	0.182	0.273	0.178	0.270	0.182	0.269	0.216	0.318	0.244	0.334	0.196	0.309	0.252	0.344	0.193	0.304	0.225	0.319	0.214	0.327
Traffic	96	**0.384**	**0.258**	0.580	0.379	0.462	0.285	0.395	0.268	0.479	0.283	0.526	0.347	0.644	0.429	0.577	0.350	0.805	0.493	0.593	0.321	0.650	0.396	0.587	0.366
	192	**0.406**	**0.266**	0.550	0.363	0.473	0.296	0.417	0.276	0.484	0.292	0.522	0.332	0.665	0.431	0.589	0.356	0.756	0.474	0.617	0.336	0.598	0.370	0.604	0.373
	336	**0.429**	**0.275**	0.559	0.363	0.498	0.296	0.433	0.283	0.503	0.299	0.517	0.334	0.674	0.420	0.594	0.358	0.762	0.477	0.629	0.336	0.605	0.373	0.621	0.383
	720	**0.466**	**0.294**	0.600	0.381	0.506	0.313	0.467	0.302	0.537	0.322	0.552	0.352	0.683	0.424	0.613	0.361	0.719	0.449	0.640	0.350	0.645	0.394	0.626	0.382
	Avg	**0.421**	**0.273**	0.572	0.372	0.485	0.298	0.428	0.282	0.501	0.299	0.529	0.341	0.667	0.426	0.593	0.356	0.761	0.473	0.620	0.336	0.625	0.383	0.610	0.376
ETTh1	96	**0.374**	**0.386**	**0.374**	0.397	0.375	0.400	0.386	0.405	0.390	0.390	0.460	0.447	0.423	0.448	0.426	0.446	0.479	0.464	0.384	0.402	0.397	0.412	0.395	0.424
	192	0.428	**0.418**	**0.416**	0.422	0.429	0.421	0.441	0.436	0.437	0.419	0.477	0.429	0.471	0.474	0.454	0.464	0.525	0.492	0.436	0.429	0.446	0.441	0.469	0.470
	336	0.464	**0.439**	**0.451**	0.443	0.484	0.458	0.487	0.458	0.497	0.445	0.546	0.496	0.570	0.546	0.493	0.487	0.565	0.515	0.491	0.469	0.489	0.467	0.530	0.499
	720	0.471	0.465	**0.463**	0.463	0.498	0.482	0.503	0.491	0.494	**0.461**	0.544	0.517	0.653	0.621	0.526	0.526	0.594	0.558	0.521	0.500	0.513	0.510	0.598	0.544
	Avg	0.434	**0.427**	**0.426**	0.431	0.447	0.440	0.454	0.447	0.455	0.429	0.507	0.472	0.529	0.522	0.475	0.481	0.541	0.507	0.458	0.450	0.461	0.458	0.498	0.484
ETTh2	96	**0.284**	**0.330**	0.290	0.340	0.289	0.341	0.297	0.349	0.290	0.336	0.308	0.355	0.745	0.584	0.372	0.424	0.400	0.440	0.340	0.374	0.340	0.394	0.358	0.397
	192	**0.357**	**0.376**	0.379	0.396	0.372	0.392	0.380	0.400	0.372	0.385	0.393	0.405	0.877	0.656	0.492	0.492	0.528	0.509	0.402	0.414	0.482	0.479	0.429	0.439
	336	0.392	**0.406**	0.423	0.435	**0.386**	0.414	0.428	0.432	0.402	0.416	0.427	0.436	1.043	0.731	0.607	0.555	0.643	0.571	0.452	0.452	0.591	0.541	0.496	0.487
	720	**0.391**	**0.418**	0.473	0.465	0.412	0.434	0.427	0.445	0.430	0.444	0.436	0.450	1.104	0.763	0.824	0.655	0.874	0.679	0.462	0.468	0.839	0.661	0.463	0.474
	Avg	**0.356**	**0.383**	0.391	0.409	0.365	0.395	0.383	0.407	0.374	0.395	0.391	0.412	0.942	0.684	0.574	0.531	0.611	0.550	0.414	0.427	0.563	0.519	0.437	0.449
ETTm1	96	**0.313**	**0.342**	0.329	0.366	0.320	0.357	0.334	0.368	0.318	0.349	0.352	0.374	0.404	0.426	0.365	0.387	0.364	0.387	0.338	0.375	0.346	0.374	0.379	0.419
	192	0.362	**0.371**	0.363	0.380	**0.361**	0.381	0.390	0.393	0.365	0.372	0.374	0.387	0.450	0.451	0.403	0.408	0.398	0.404	0.374	0.387	0.382	0.391	0.426	0.441
	336	**0.385**	**0.389**	0.390	0.404	0.390	0.404	0.426	0.420	0.401	0.397	0.421	0.414	0.532	0.515	0.436	0.431	0.428	0.425	0.410	0.411	0.415	0.415	0.445	0.459
	720	**0.444**	**0.424**	0.460	0.443	0.454	0.441	0.491	0.459	0.460	0.432	0.462	0.449	0.666	0.589	0.489	0.462	0.487	0.461	0.478	0.450	0.473	0.451	0.543	0.490
	Avg	**0.376**	**0.382**	0.386	0.398	0.381	0.396	0.410	0.410	0.382	0.386	0.402	0.406	0.513	0.495	0.423	0.422	0.419	0.419	0.400	0.406	0.404	0.408	0.448	0.452
ETTm2	96	0.169	**0.244**	0.174	0.255	0.175	0.258	0.180	0.264	**0.168**	0.247	0.183	0.270	0.287	0.366	0.197	0.296	0.207	0.305	0.187	0.267	0.193	0.293	0.203	0.287
	192	**0.233**	**0.288**	0.239	0.299	0.237	0.299	0.250	0.309	0.234	0.291	0.255	0.314	0.414	0.492	0.284	0.361	0.290	0.364	0.249	0.309	0.284	0.361	0.269	0.328
	336	**0.291**	**0.327**	0.301	0.340	0.298	0.340	0.311	0.348	0.297	0.333	0.309	0.347	0.597	0.542	0.381	0.429	0.377	0.422	0.321	0.351	0.382	0.429	0.325	0.366
	720	0.387	0.387	0.395	0.396	0.391	0.396	0.412	0.407	**0.386**	**0.385**	0.412	0.404	1.730	1.042	0.549	0.522	0.558	0.524	0.408	0.403	0.558	0.525	0.421	0.415
	Avg	**0.270**	**0.312**	0.277	0.322	0.275	0.323	0.288	0.332	0.271	0.314	0.290	0.334	0.757	0.611	0.353	0.402	0.358	0.404	0.291	0.333	0.354	0.402	0.305	0.349

VPNet

FAIR Lab

KWANGWOON UNIVERSITY

Ablation study

Table 2: Ablation study on the cross-variate kernel size k_v. We report the average MSE over all prediction lengths for each benchmark. The case $k_v = 1$ is the channel-independent baseline. Lower is better.

VPNET	ETTh1	ETTh2	ETTm1	ETTm2	ECL	Traffic	Weather	Solar
$k_v = 1$	0.437	0.362	0.375	0.282	0.184	0.443	0.254	0.224
$k_v = 3$	0.435	0.362	0.378	0.275	0.171	0.431	0.250	0.203
$k_v = 7$	0.434	0.355	0.375	0.273	0.167	0.435	0.248	0.204
$k_v = 17$	-	-	-	-	0.162	0.423	0.239	0.204
$k_v = 27$	-	-	-	-	0.160	0.422	0.243	0.204

Table 3: Ablation study on variate reordering strategies. We report the average MSE across four prediction lengths 96, 192, 336, 720 for each of the eight benchmarks, with a fixed input length of 96. All models use a fixed configuration ($k_v = 3, N = 2$ layers). Lower is better.

VPNET	ETTh1	ETTh2	ETTm1	ETTm2	ECL	Traffic	Weather	Solar
Original	0.435	0.362	0.378	0.275	0.171	0.431	0.247	0.205
Spectral	0.436	0.366	0.374	0.275	0.174	0.428	0.246	0.209
Degree	0.436	0.365	0.378	0.276	0.173	0.433	0.247	0.209
Random	0.439	0.362	0.378	0.275	0.171	0.431	0.247	0.205

- Table 2의 경우, 커널 크기에 따른 성능 변화
- Table 3의 경우, 변수 정렬 방식에 따른 성능 변화

VPNet

FAIR Lab

KWANGWOON UNIVERSITY

실험 세팅

- 사용한 모델: VPNet
- 재현 실험 데이터셋: ETTh1, ETTm1

Experiment	ETTh1
Learning rate	10^{-4}
Epoch	100
Batch size	32
Loss function	MAE Loss
Seq_len	96
Pred_len	96/192/336/720
Layers	2
Patch Size	8
Hidden_len	96
Middle_len	512

VPNet

FAIR Lab

KWANGWOON UNIVERSITY

VPNet 재현 실험 (ETTh1)

	ETTh1 Paper		ETTh1 Reproduction	
Pred len	MSE	MAE	MSE	MAE
96	0.374	0.386	0.374	0.386
192	0.428	0.418	0.428	0.418
336	0.464	0.439	0.464	0.439
720	0.471	0.465	0.471	0.465

VPNet

FAIR Lab

KWANGWOON UNIVERSITY

VPNet 재현 실험 (ETTm1)

	ETTm1 Paper		ETTm1 Reproduction	
Pred len	MSE	MAE	MSE	MAE
96	0.313	0.342	0.311	0.341
192	0.362	0.371	0.362	0.371
336	0.385	0.389	0.386	0.390
720	0.444	0.424	0.444	0.425

부록

VPNet

FAIR Lab

KWANGWOON UNIVERSITY

Efficiency comparison

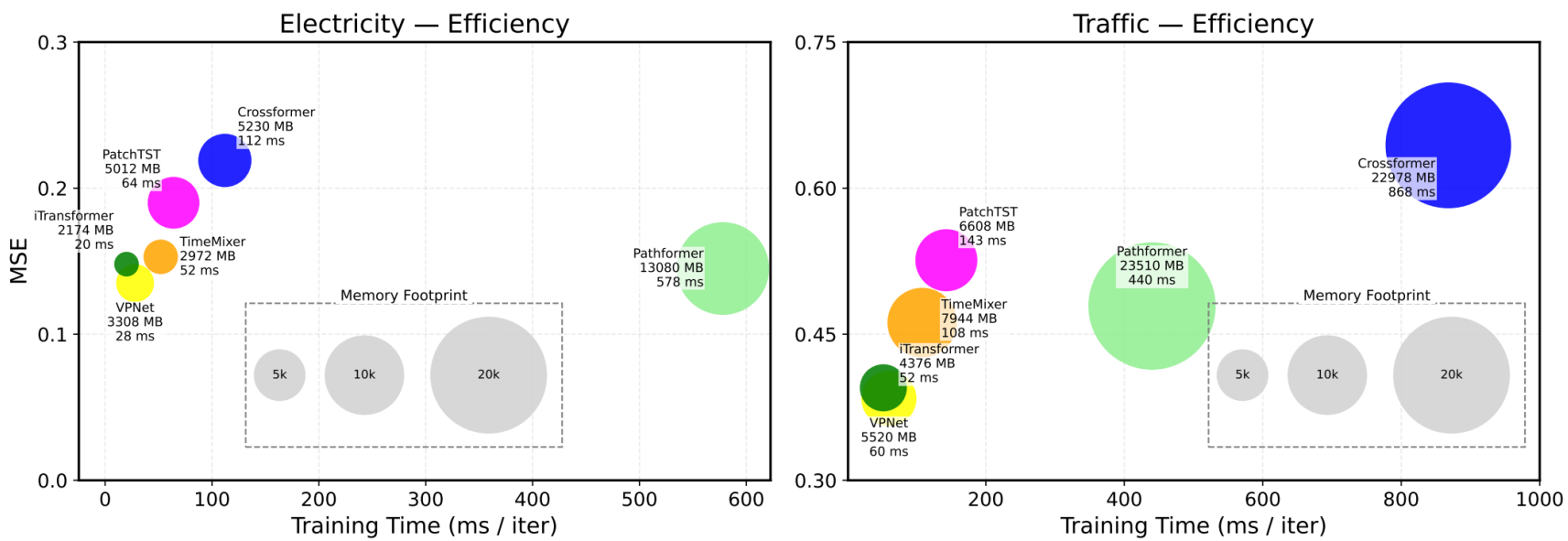

- 각 데이터셋에서 VPNet의 성능이 가장 좋게 나왔으며, 학습 속도가 빠르면서 메모리 사용량이 낮은 것을 확인하였음

VPNet

datasets

Table 5: Statistics of the benchmark datasets.

Dataset	Dim	Series Length	Dataset Size	Frequency	Information
ETTh1	7	{96, 192, 336, 720}	(34465, 11521, 11521)	Hourly	Temperature
ETTh2	7	{96, 192, 336, 720}	(34465, 11521, 11521)	Hourly	Temperature
ETTm1	7	{96, 192, 336, 720}	(8545, 2881, 2881)	15 min	Temperature
ETTm2	7	{96, 192, 336, 720}	(8545, 2881, 2881)	15 min	Temperature
Electricity	321	{96, 192, 336, 720}	(18317, 2633, 5261)	Hourly	Electricity
Weather	21	{96, 192, 336, 720}	(36792, 5271, 10540)	10 min	Weather
Traffic	862	{96, 192, 336, 720}	(12185, 1757, 3509)	Hourly	Transportation
Solar-Energy	137	{96, 192, 336, 720}	(36601, 5161, 10417)	10 min	Electricity

VPNet

FAIR Lab

KWANGWOON UNIVERSITY

Probability Analysis for Different Parameters

Table 6: Probability Analysis for Different Parameters

Info. Variate Ratio	**Probability for $\mathcal{E}_k$**			
(r/C)	**k=1**	**k=3**	**k=7**	**k=17**
10%	0.095	0.259	0.799	0.999
30%	0.259	0.593	0.996	1.000
50%	0.393	0.777	1.000	1.000
70%	0.503	0.878	1.000	1.000
90%	0.593	0.931	1.000	1.000

- 기존 방식인 1일 때, 중요한 변수가 전체의 10%인데 해당 변수를 잡아낼 확률은 9.5%
  VPNet과 같이 커널커널 크기가 크기를 크게 잡으면 중요한 상관관계를 놓치지 않고 학습 가능해짐

Info. Variate Ratio: 전체 변수 중 실제로 예측에 도움이 되는 변수가 차지하는 비율

$Probability for \mathcal{E}_k$: 커널이 슬라이딩할 때, 최소 하나 이상의 유의미한 변수가 포함될 확률