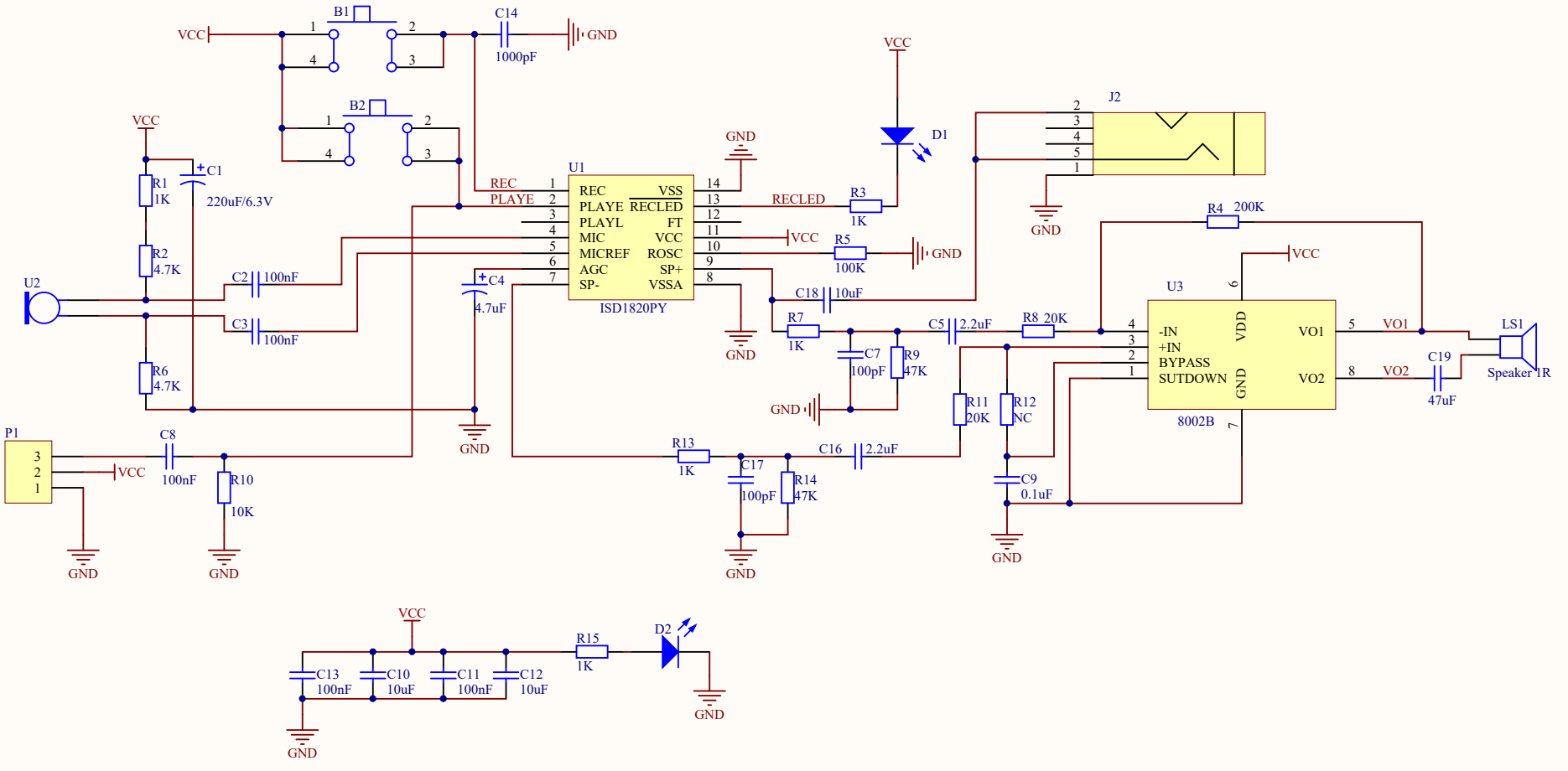


| Title | | |
|---|---|---|
| Size A4 | Number | Revision |
| Date: 2018/10/18 | | Sheet of |
| File: E:\qq dowmload\ .schdoc | | Drawn By: |