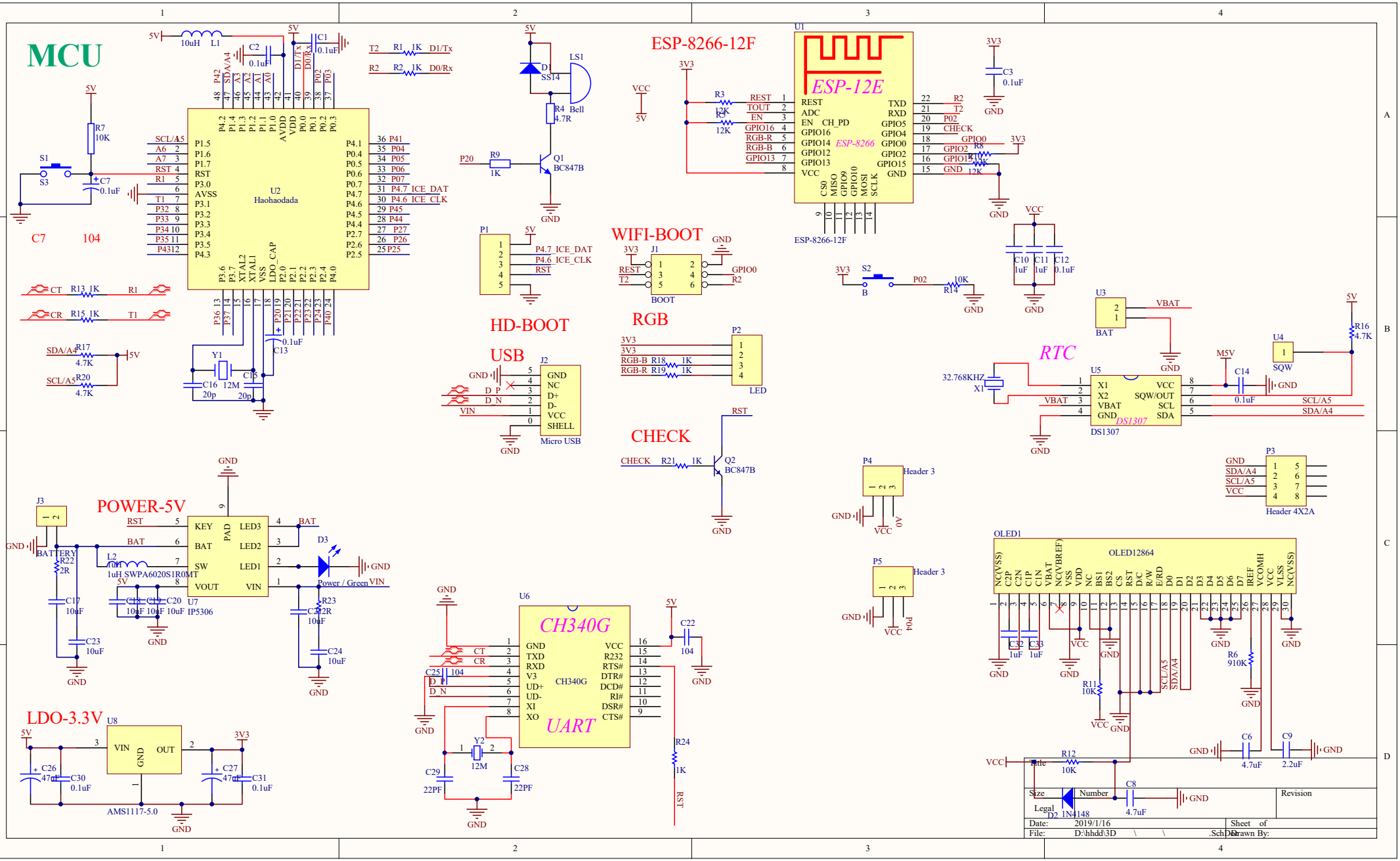
MCU
U2
Haohaodada
C7 104
ESP-8266-12F
U1
ESP-12E
ESP-8266
ESP-8266-12F
WIFI-BOOT
J1
BOOT
HD-BOOT
P1
RGB
P2
LED
USB
J2
Micro USB
CHECK
Q2
BC847B
RTC
U5
DS1307
U3
BAT
U4
SQW
X1
32.768KHZ
POWER-5V
U7
IP5306
L2
1uH SWPA6020S1R0MT
D3
Power / Green
J3
BATTERY
LDO-3.3V
U8
AMS1117-5.0
U6
CH340G
UART
P3
Header 4X2A
P4
Header 3
P5
Header 3
OLED1
OLED12864
D2 1N4148
Date: 2019/1/16
File: D:\hhdd\3D
Sheet of
Drawn By:
Size
Number
Revision
Legal