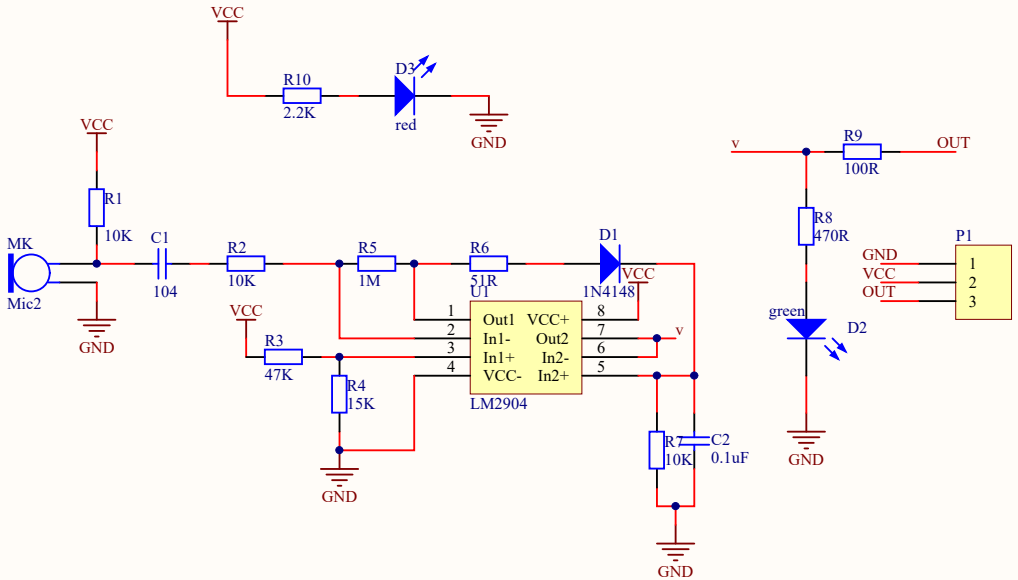

Title		
Size A4	Number	Revision
Date: 2018/10/18	Sheet of	
File: E:\qq dowmload\sound.schdoc	Drawn By:	