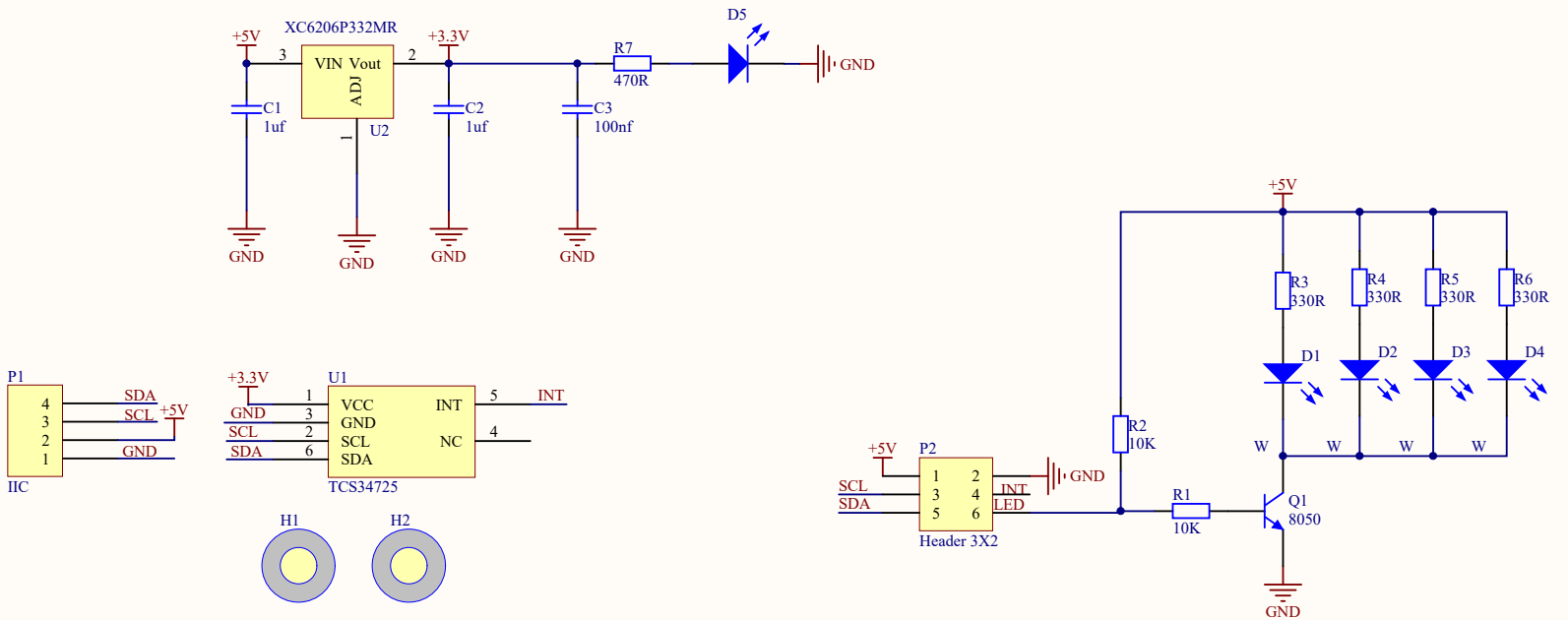

Title		
Size A4	Number	Revision
Date: 2018/10/18		Sheet of
File: E:\qq dowmload\ .schdoc		Drawn By: