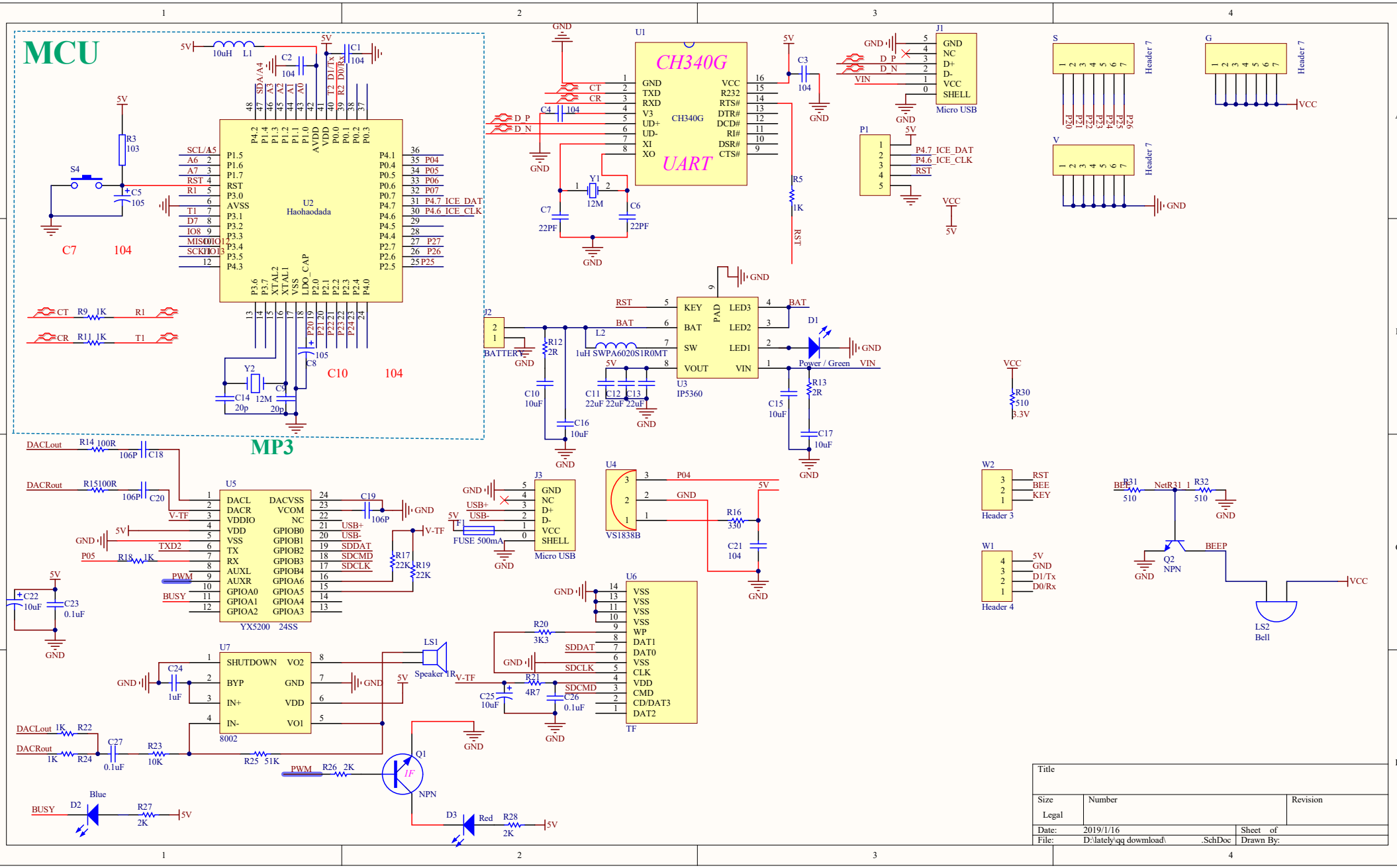
MCU
MP3
U2
Haohaodada
U1
CH340G
UART
U3
IP5360
U5
YX5200 24SS
U6
TF
U7
8002
J1
Micro USB
J3
Micro USB
U4
VS1838B
W2
Header 3
W1
Header 4
S
G
V
Header 7
LS1
Speaker 1R
LS2
Bell
Q1
NPN
Q2
NPN
D1
Power / Green
D2
Blue
D3
Red
BATTERY
FUSE 500mA
Title
Size
Legal
Number
Revision
Date: 2019/1/16
Sheet of
File: D:\lately\qq download\ .SchDoc
Drawn By: