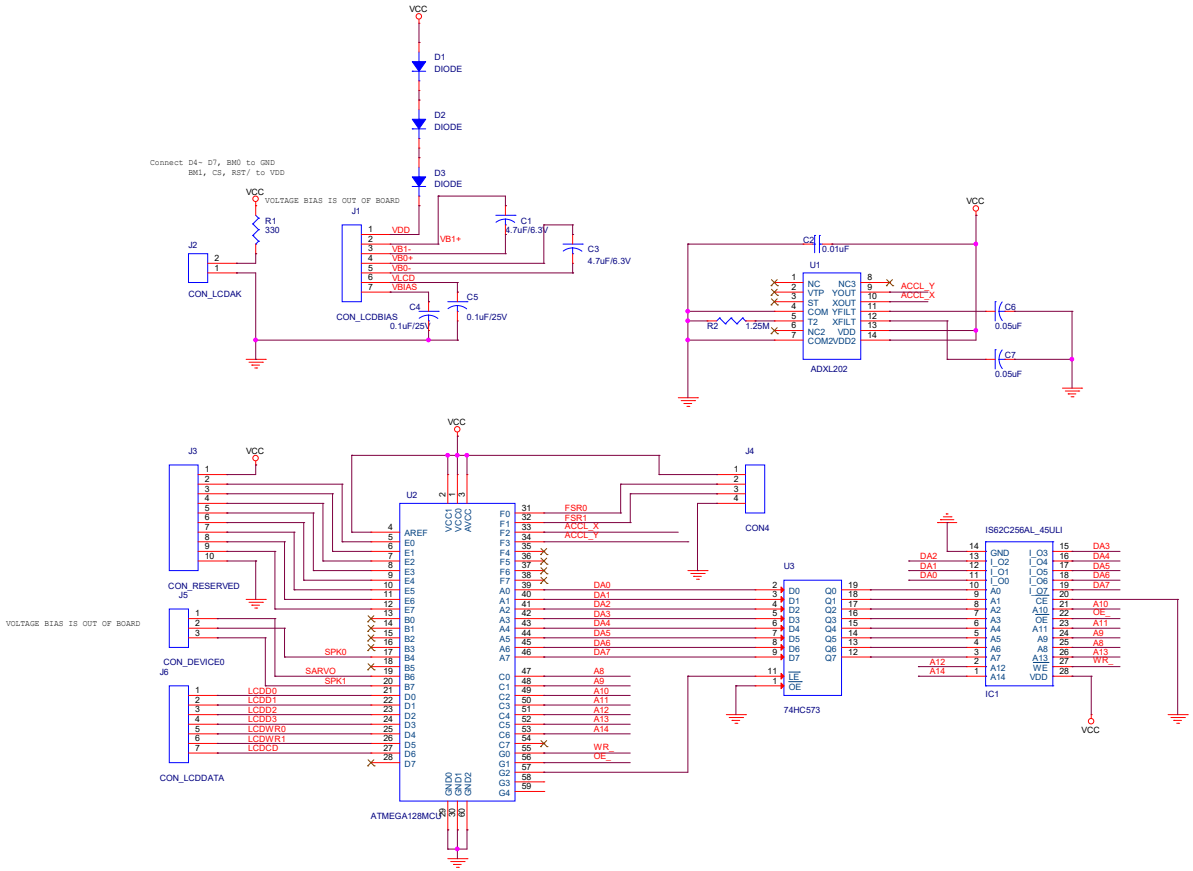

Title	<Title>
Size A2	Document Number <Doc>
Rev	<RevCo
Date: Sunday, April 28, 2019	Sheet 1 of 1