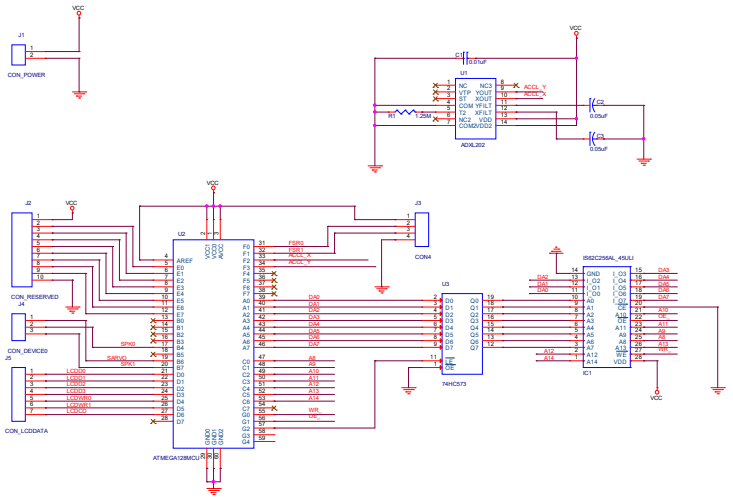

Title	<Title>		
Size A2	Document Number <Doc>		Rev <Revision>
Date: Saturday, May 04, 2019		Sheet 1 of 1	