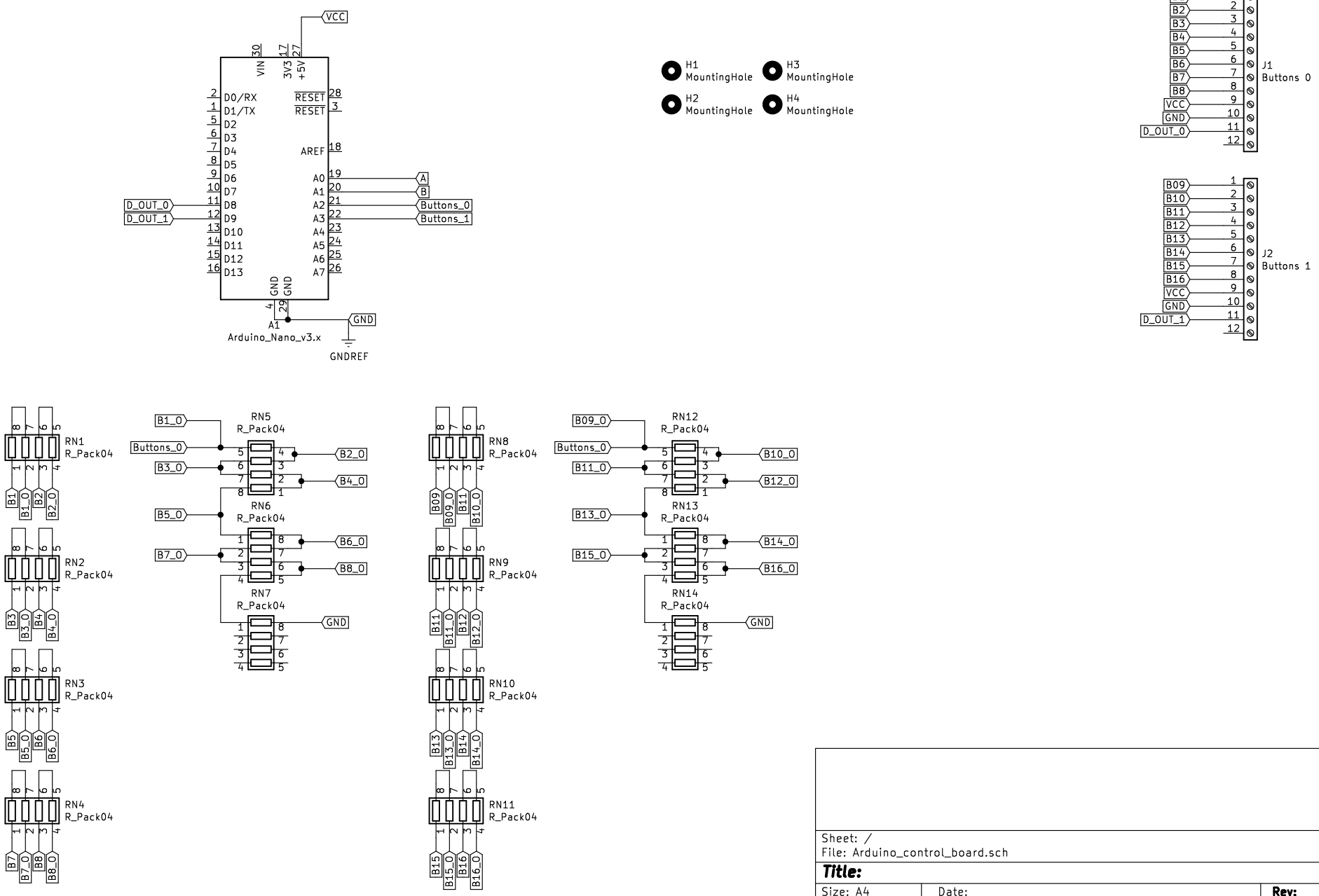

Sheet: /
File: Arduino_control_board.sch

Title:

Size: A4	Date:	Rev:
KiCad E.D.A. eeschema (5.1.5)-3		Id: 1/1