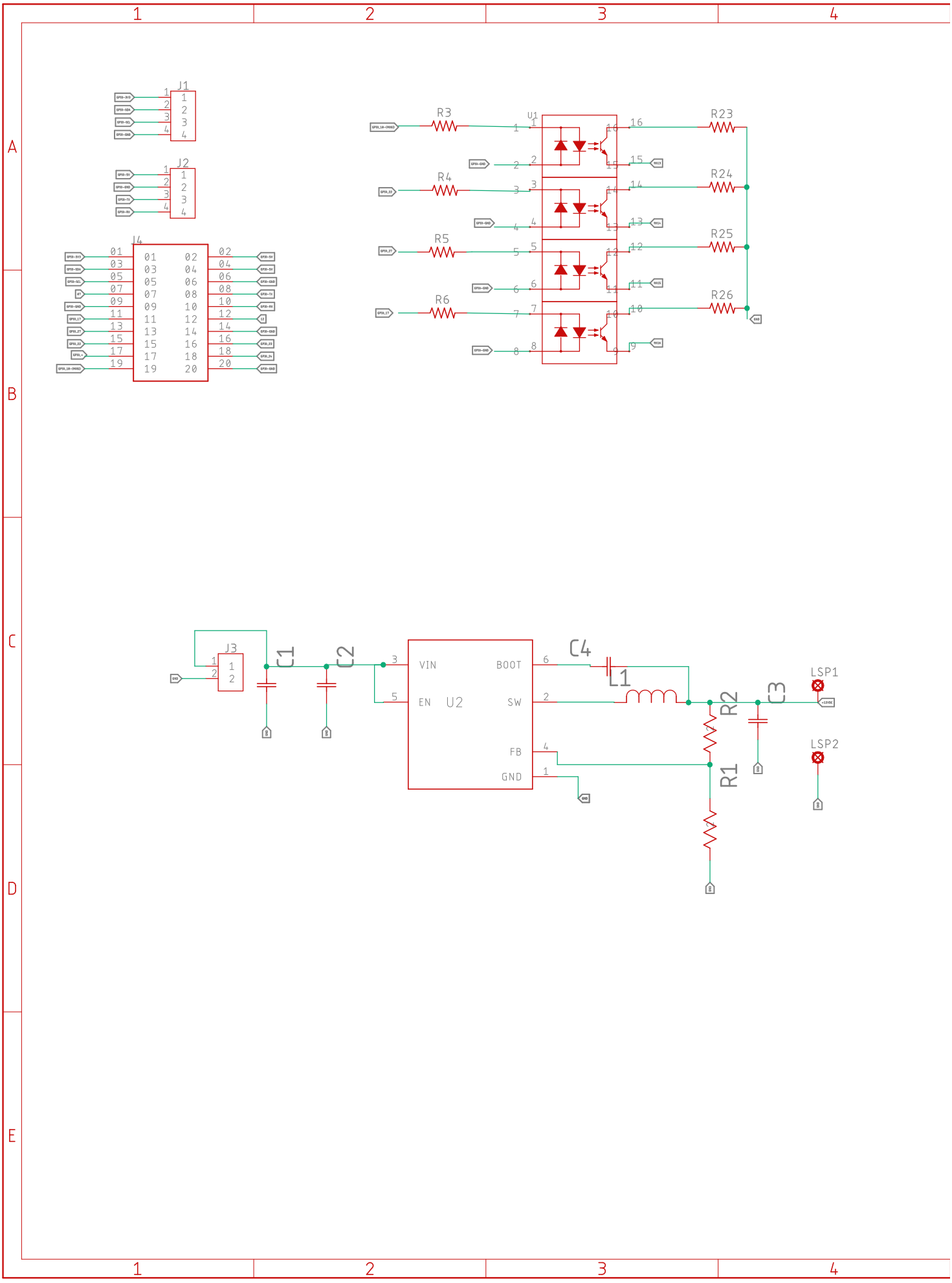
J1
J2
J4
R3
R4
R5
R6
U1
R23
R24
R25
R26
J3
C1
C2
VIN
EN
U2
BOOT
SW
FB
GND
C4
L1
R2
R1
C3
LSP1
LSP2

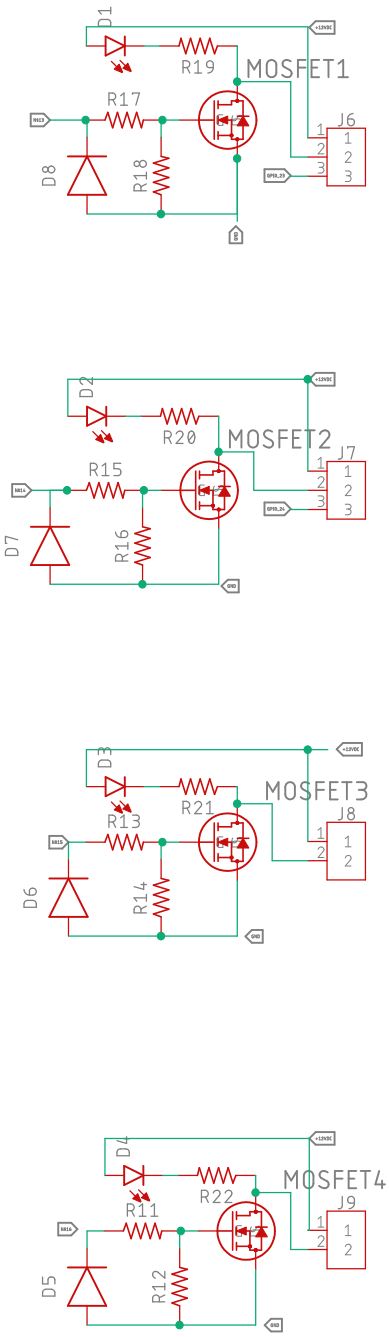

Pi Hat Driver Modual_54302 v10	a Mr.B'sStuff creation
	REV 7.10 02/01/2024
	Sheet: 1/1