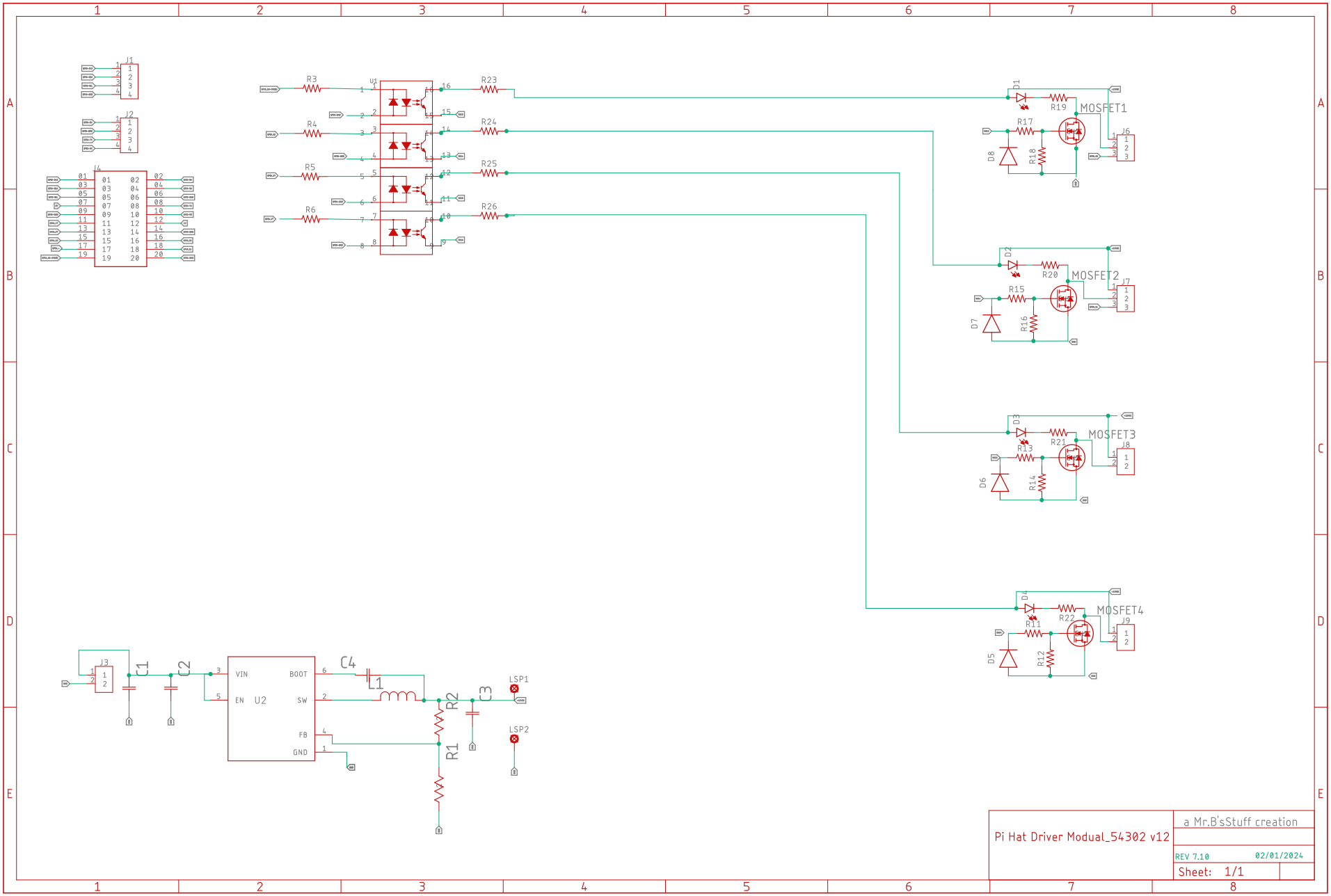

Pi Hat Driver Modual_54302 v12

a Mr.B'sStuff creation

REV 7.10 02/01/2024

Sheet: 1/1