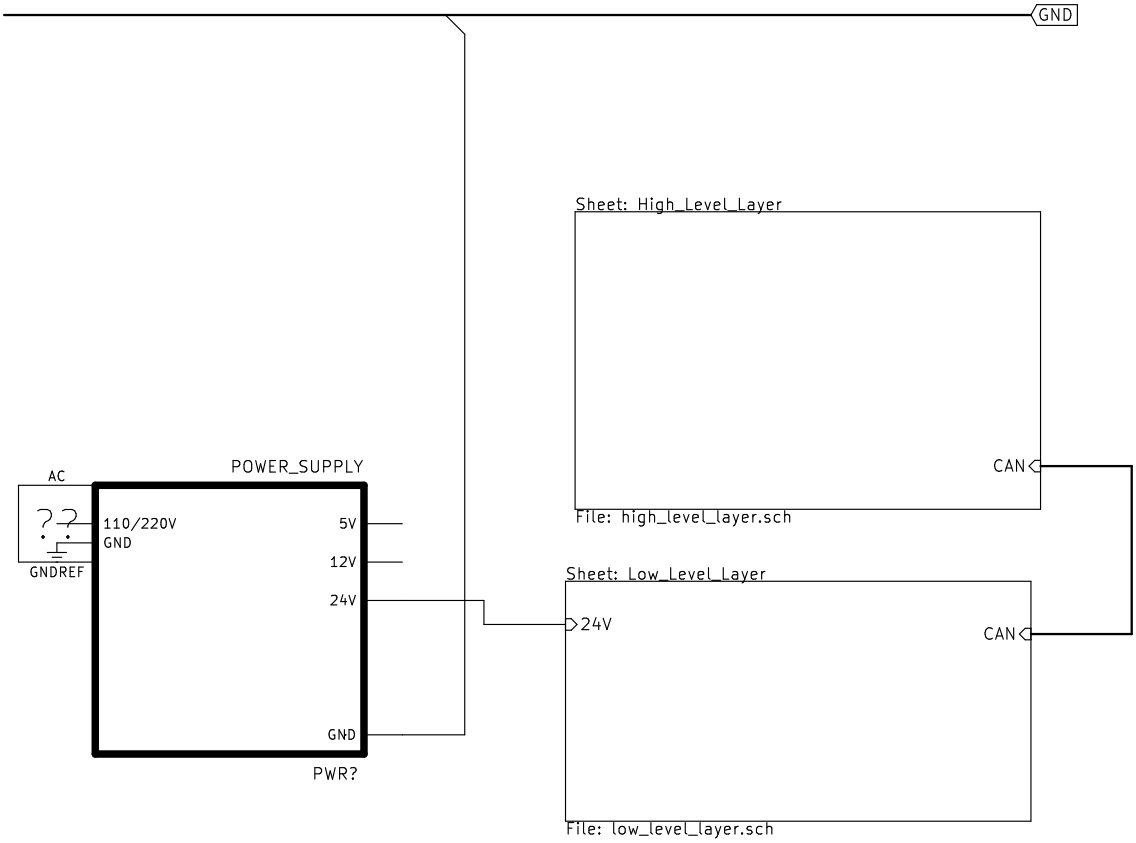

Sheet: /
File: modexo.sch

Title:

Size: A4	Date:	**Rev:**
KiCad E.D.A. eeschema 4.0.4-stable		Id: 1/3

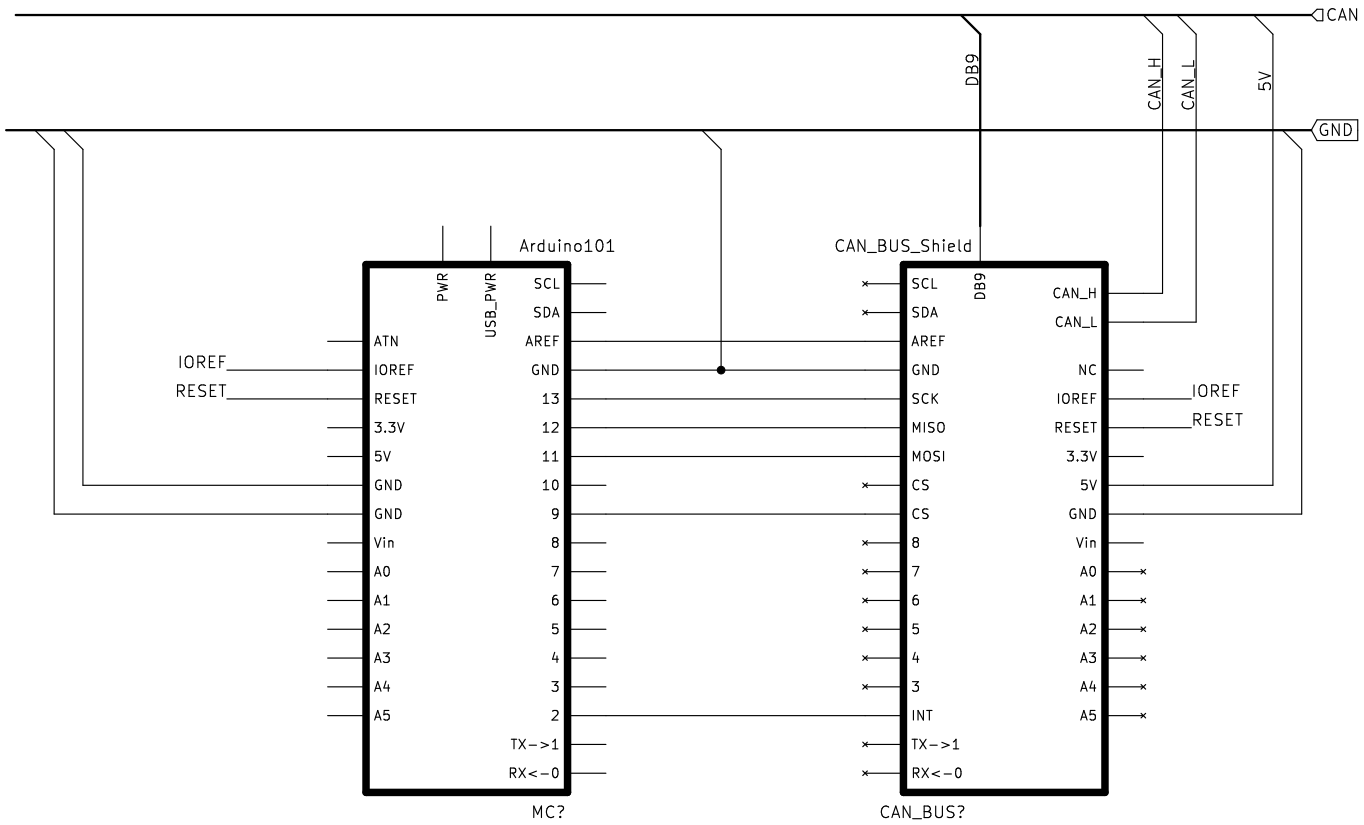

Sheet: /High_Level_Layer/
File: high_level_layer.sch

Title: High Level Layer Communication

Size: A4	Date:	Rev:
KiCad E.D.A. eeschema 4.0.4-stable		Id: 2/3

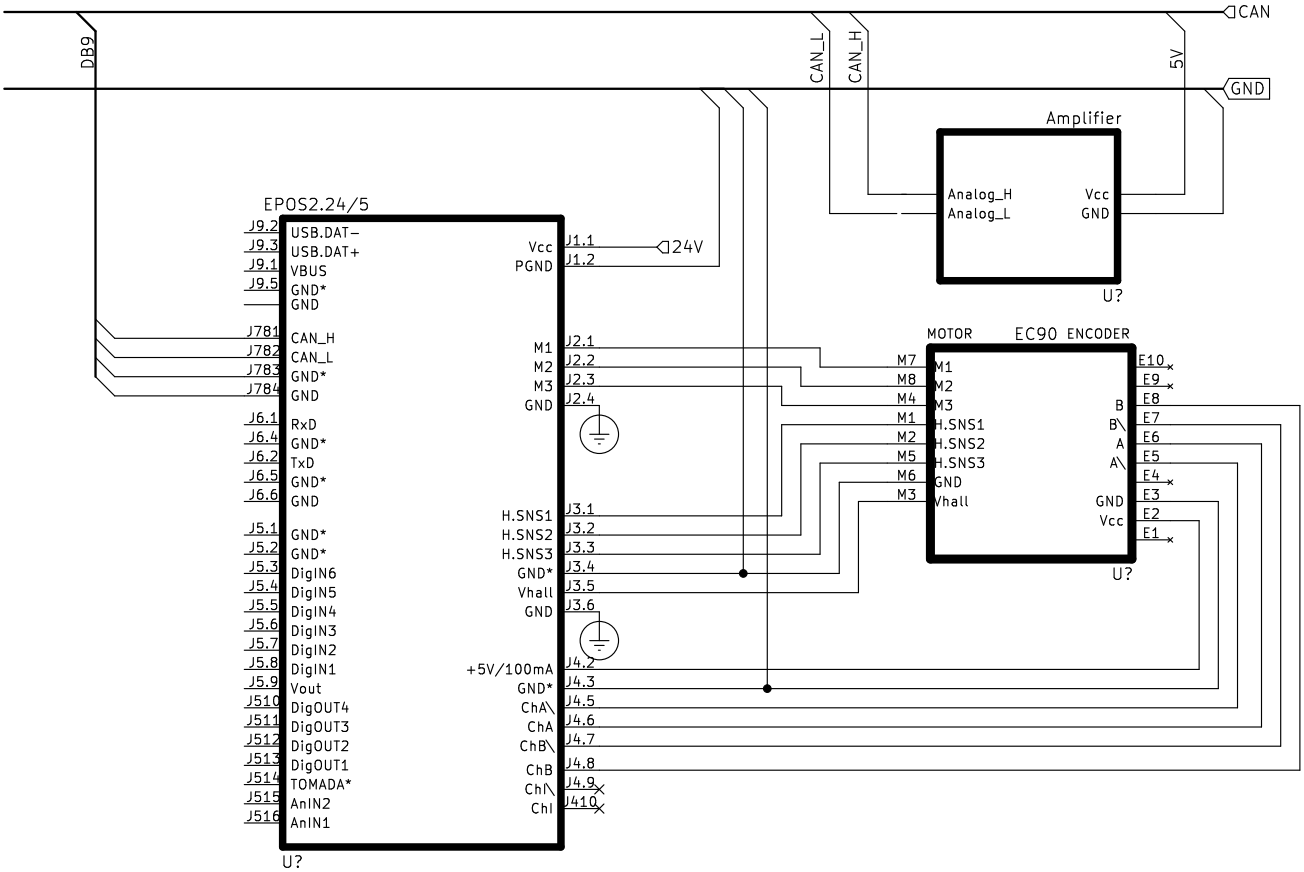

Sheet: /Low_Level_Layer/
File: low_level_layer.sch

Title: Low Level Layer Communication

Size: A4	Date:	Rev:
KiCad E.D.A. eeschema 4.0.4-stable		Id: 3/3