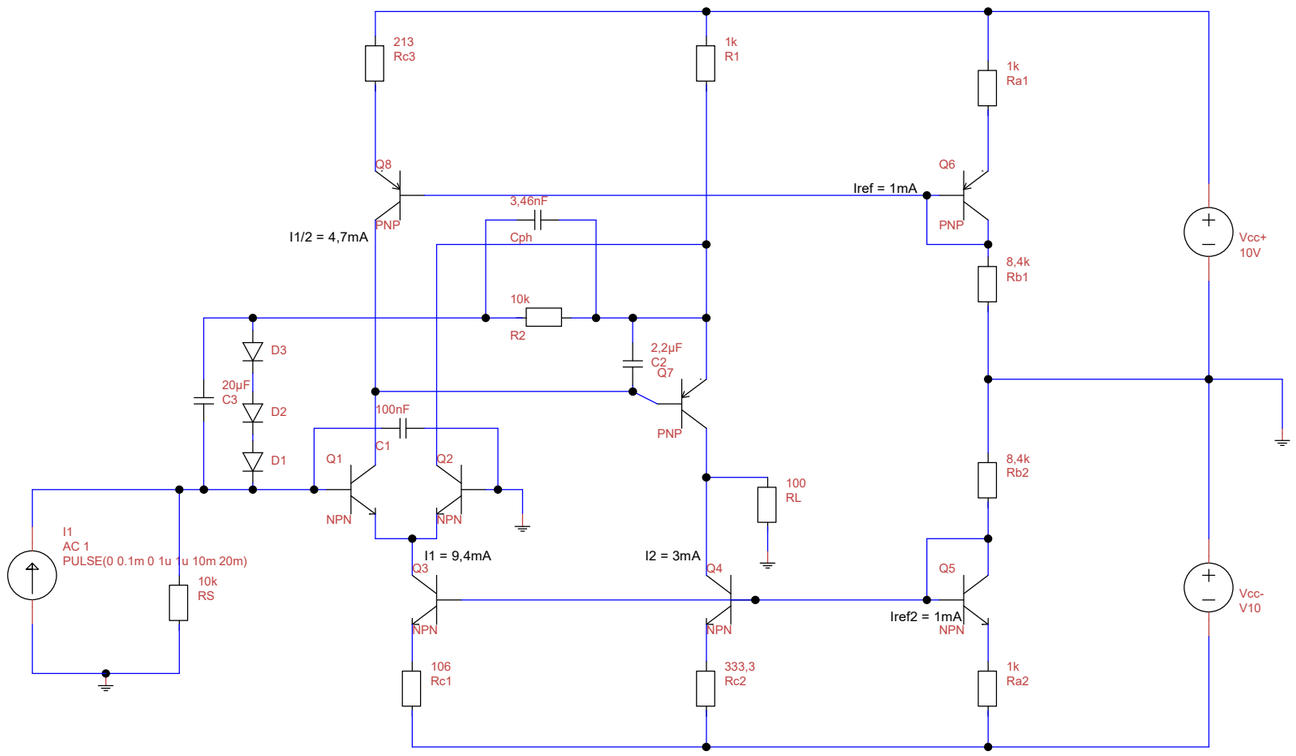

Title Final implementation		
Author Group 11		
File C:\Users\f ... FinalImplementationGroup11.dsn		Document
Revision 1.0	Date	Sheets 1 of 1