CONNECTORS

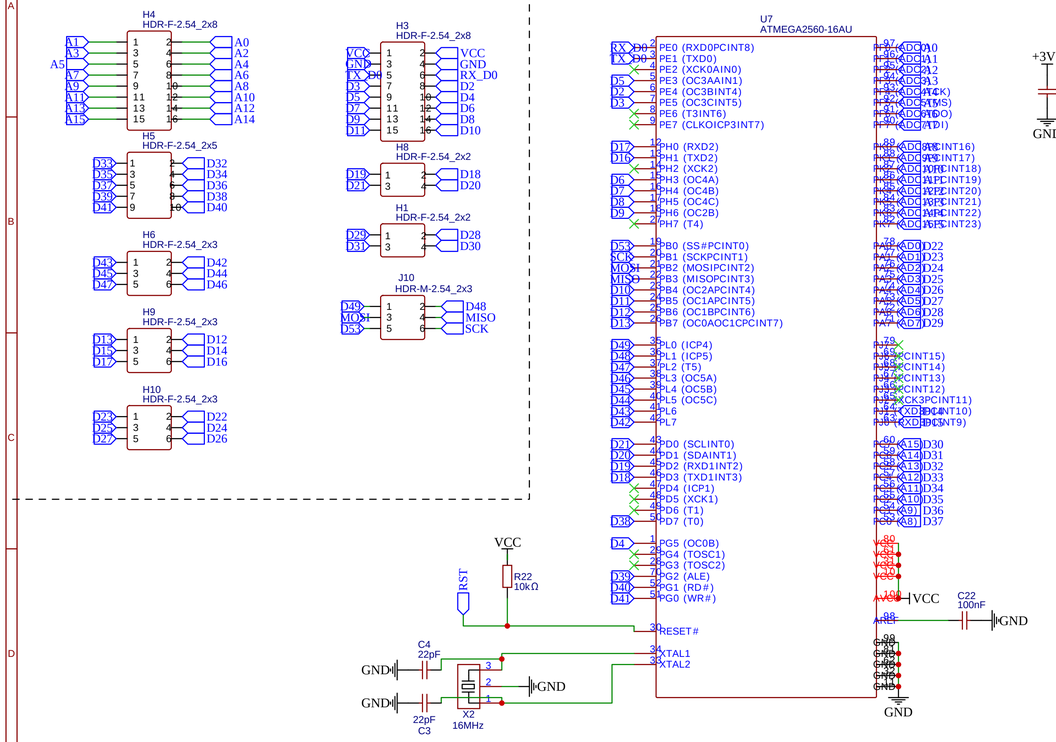

ATMEGA 2560

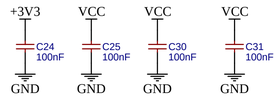

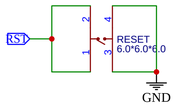

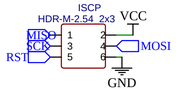

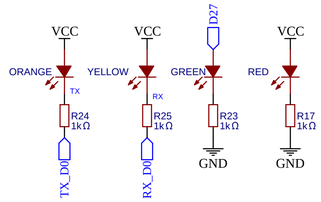

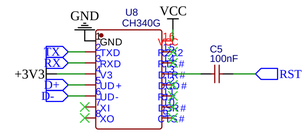

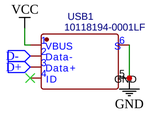

EXTERNAL POWER_SUPPLY

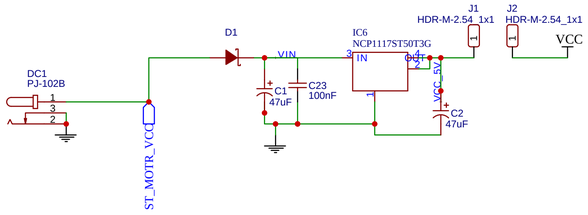

ULN2003AN MOTOR DRIVER

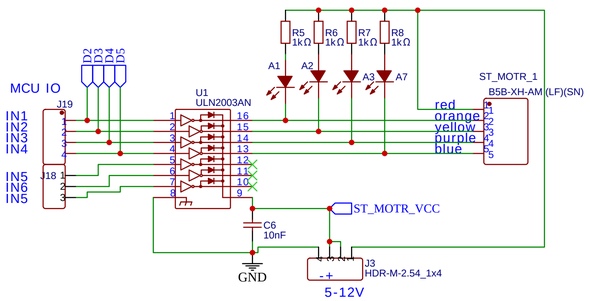

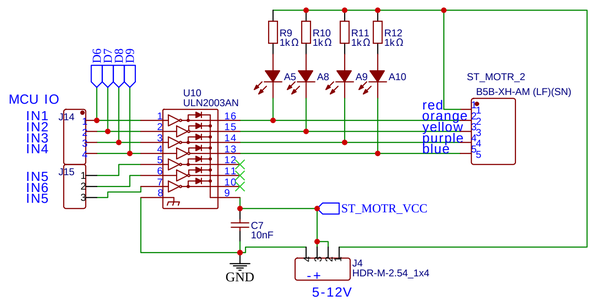

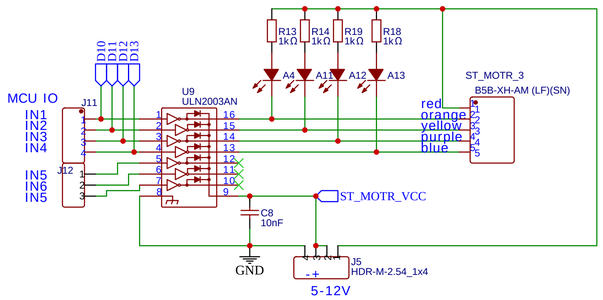

PERIFERALS CONNECTORS

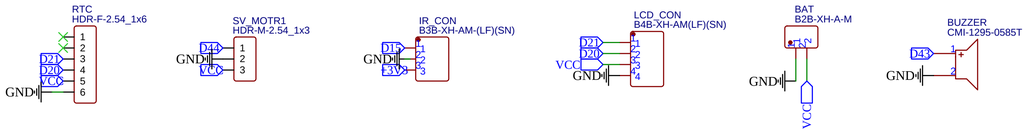

PUSH CONN

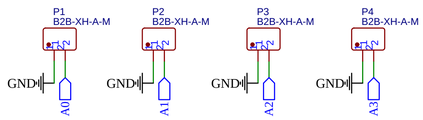

SIM800L

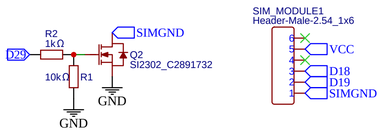

TITLE: DISPENSER	REV: 1.0
Company: Personal Project	Sheet: 1/1
Date: 2024-11-25 Drawn By: JANARDHAN B V	