Battery Input + Switch

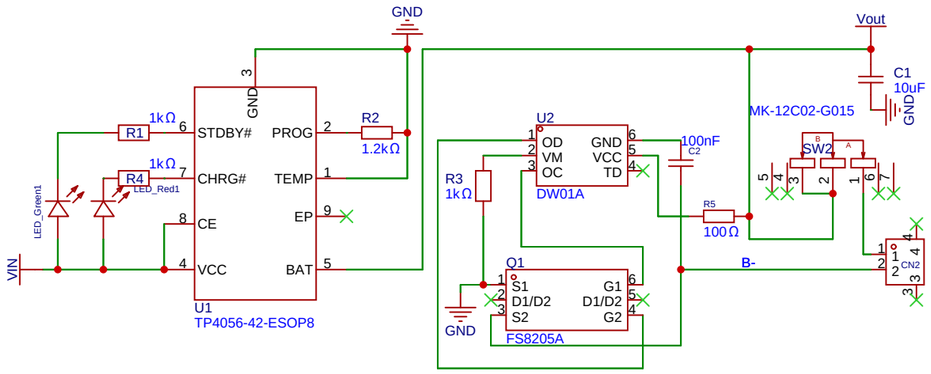

GYRO

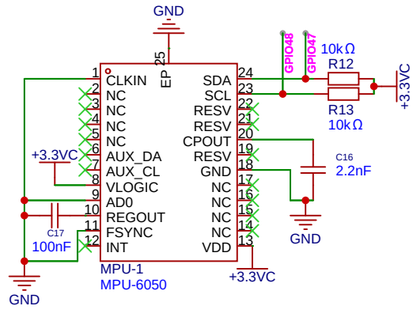

SD_MMC

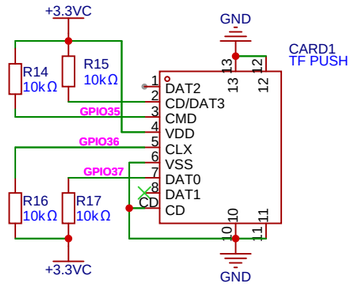

USB To OTG

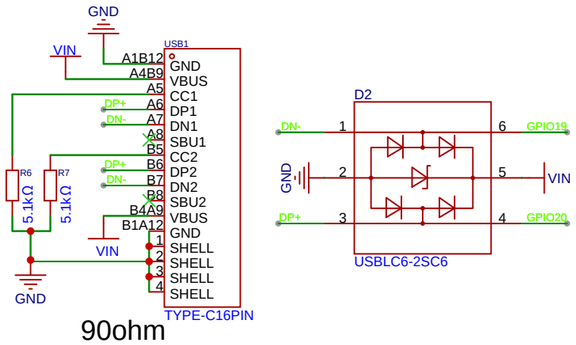

90ohm
differential pair

SOC

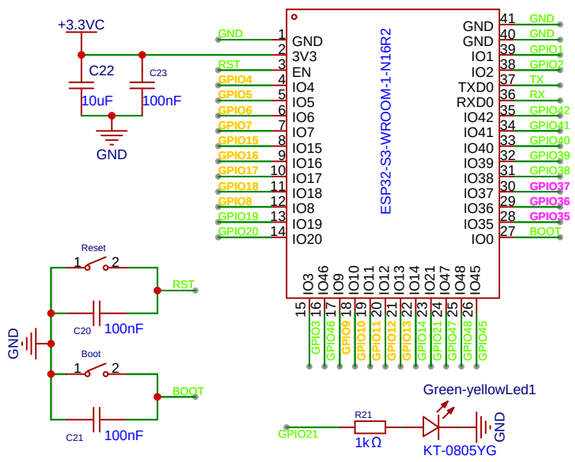

MOSFETS

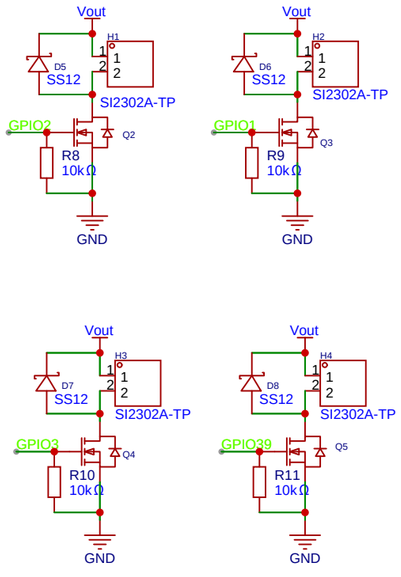

Power Regulator (SOC)

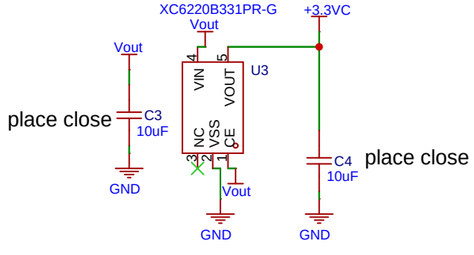

CAMERA

OV2640 FPC 24P

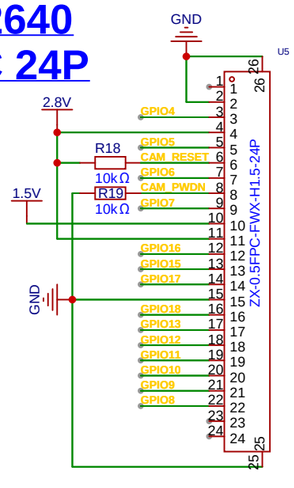

CAMERA SUPPLIES

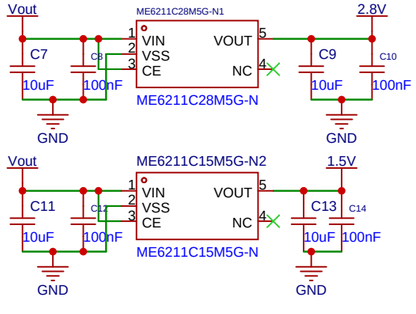

Schematic	Schematic1	Create at	2026-04-17
		Update at	2026-04-19
Board	Board1	Page	P1
Drawn	MiniDrone		
Reviewed			
		Version	Size	Page 1 Total 1
EasyEDA		V1.0	A4	EasyEDA.com