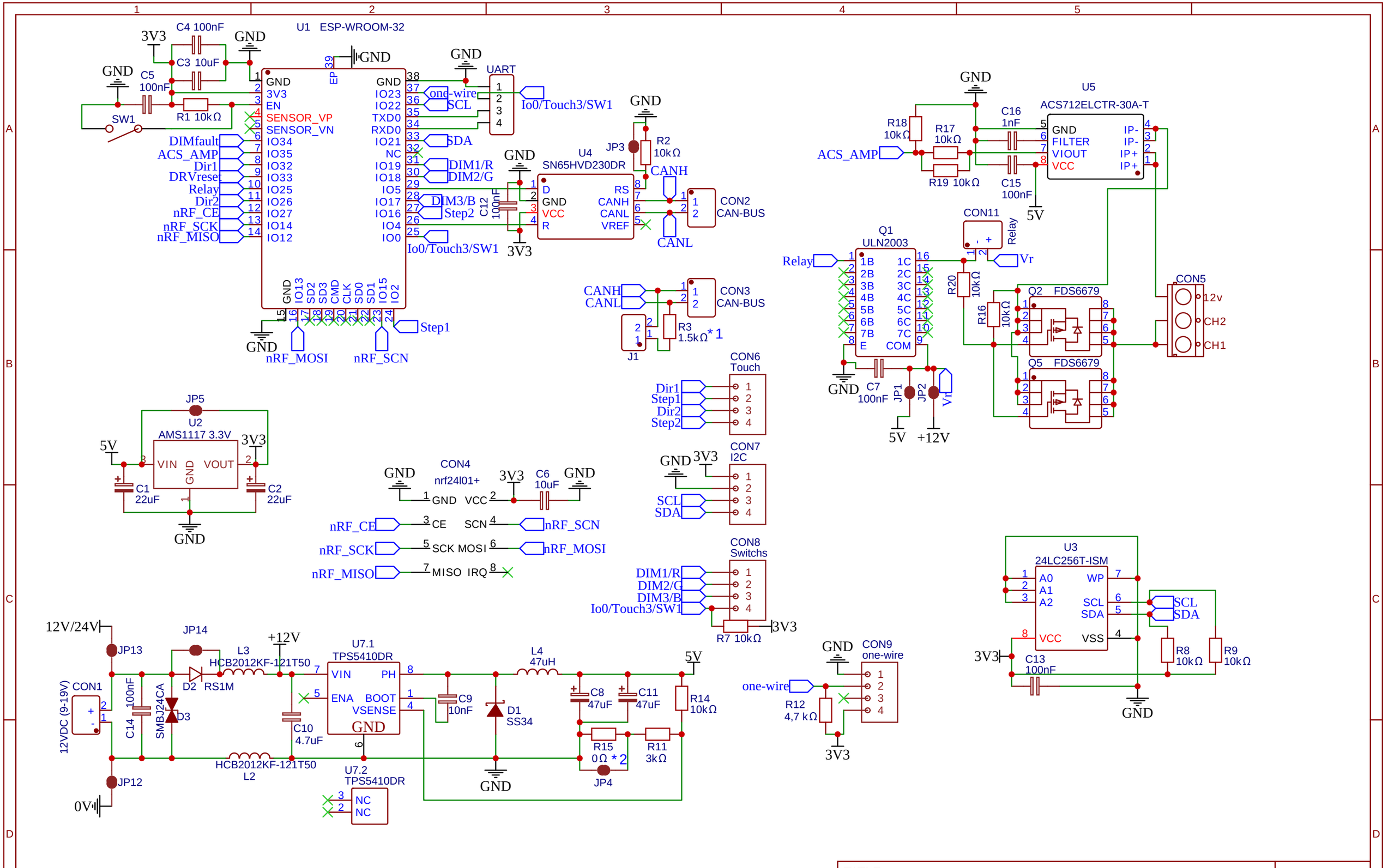

*1 - 1.5kΩ dla 25 urządzeń. Rt=60:(1:25)=1500Ω
*2 - R15 jesli 3kΩ to Vout=[(R14*1.221):(R11+R15)]+1.221=3.256V
dla 3.256V Kondensator min. 136uF (C8, C11)

TITLE: ESP32 CAN-BUS nRF24l01	REV: 1.0
EasyEDA	Company: JLU
	Sheet: 1/1
	Date: 2020-01-23 Drawn By: Jan Łukaszewicz

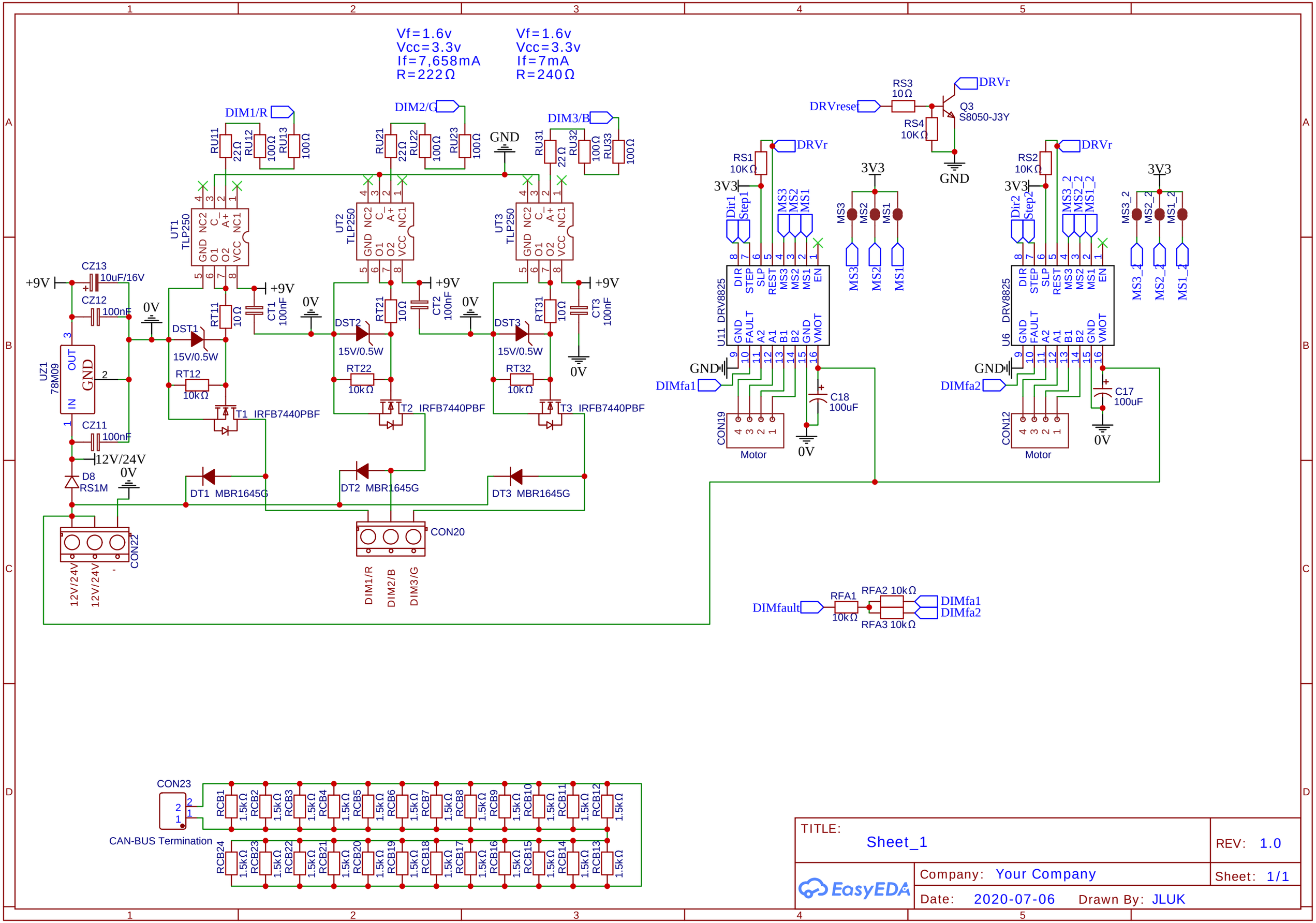
Vf=1.6v
Vcc=3.3v
If=7,658mA
R=222Ω
Vf=1.6v
Vcc=3.3v
If=7mA
R=240Ω
DIM1/R
DIM2/G
DIM3/B
GND
UT1 TLP250
UT2 TLP250
UT3 TLP250
+9V
0V
CZ13 10uF/16V
CZ12 100nF
CZ11 100nF
UZ1 78M09
12V/24V
D8 RS1M
DST1 15V/0.5W
DST2 15V/0.5W
DST3 15V/0.5W
RT12 10kΩ
RT22 10kΩ
RT32 10kΩ
T1 IRFB7440PBF
T2 IRFB7440PBF
T3 IRFB7440PBF
DT1 MBR1645G
DT2 MBR1645G
DT3 MBR1645G
CON22
CON20
DRVreset
DRVr
RS3 10Ω
RS4 10KΩ
Q3 S8050-J3Y
RS1 10KΩ
RS2 10KΩ
3V3
Dir1
Step1
Dir2
Step2
MS3
MS2
MS1
U11 DRV8825
U6 DRV8825
DIMfa1
DIMfa2
C18 100uF
C17 100uF
CON19
CON12
Motor
DIMfault
RFA1 10kΩ
RFA2 10kΩ
RFA3 10kΩ
CON23
CAN-BUS Termination
RCB1 1.5kΩ
RCB2 1.5kΩ
RCB3 1.5kΩ
RCB4 1.5kΩ
RCB5 1.5kΩ
RCB6 1.5kΩ
RCB7 1.5kΩ
RCB8 1.5kΩ
RCB9 1.5kΩ
RCB10 1.5kΩ
RCB11 1.5kΩ
RCB12 1.5kΩ
RCB13 1.5kΩ
RCB14 1.5kΩ
RCB15 1.5kΩ
RCB16 1.5kΩ
RCB17 1.5kΩ
RCB18 1.5kΩ
RCB19 1.5kΩ
RCB20 1.5kΩ
RCB21 1.5kΩ
RCB22 1.5kΩ
RCB23 1.5kΩ
RCB24 1.5kΩ
TITLE: Sheet_1
REV: 1.0
Company: Your Company
Sheet: 1/1
Date: 2020-07-06
Drawn By: JLUK
EasyEDA

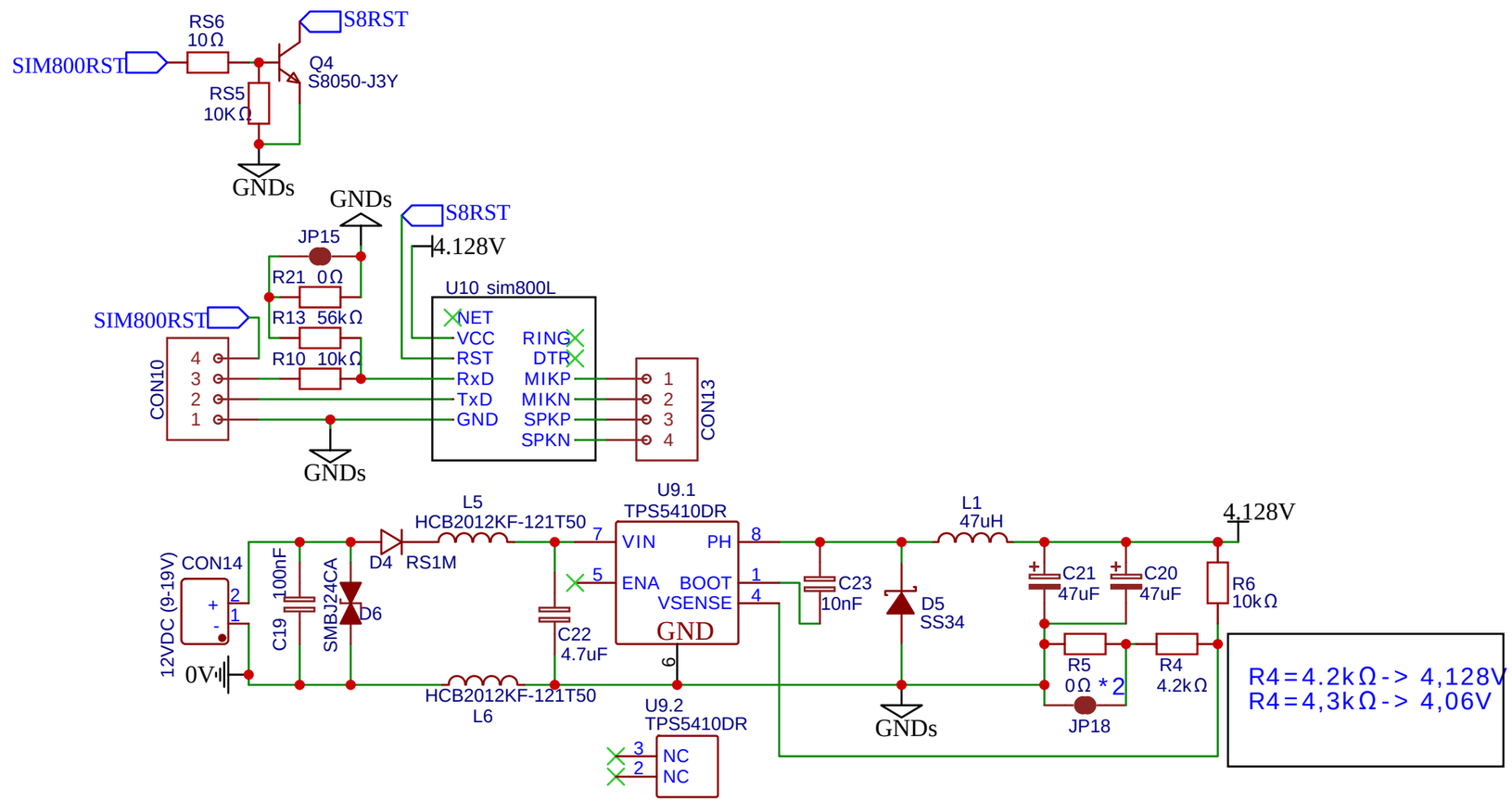

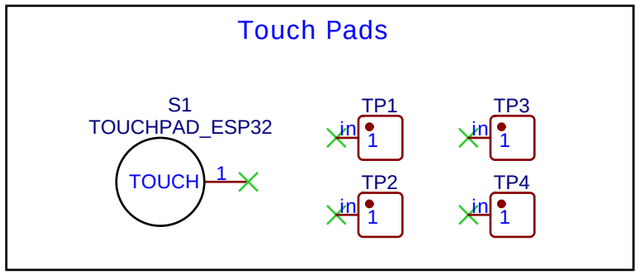

TITLE: Sheet_2		REV: 1.0
EasyEDA	Company: Your Company	Sheet: 1/1
	Date: 2020-07-14 Drawn By: JLUK	

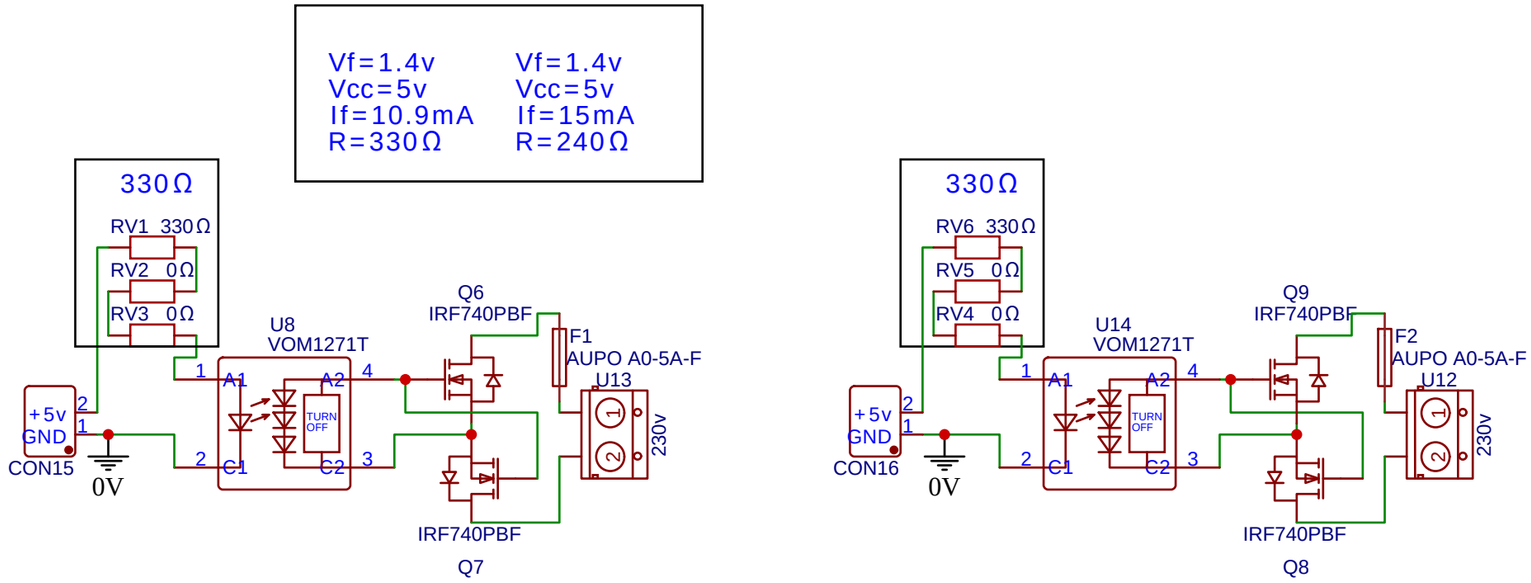

TITLE: Sheet_1		REV: 1.0
EasyEDA	Company: Your Company	Sheet: 1/1
	Date: 2020-07-18 Drawn By: JLUK	

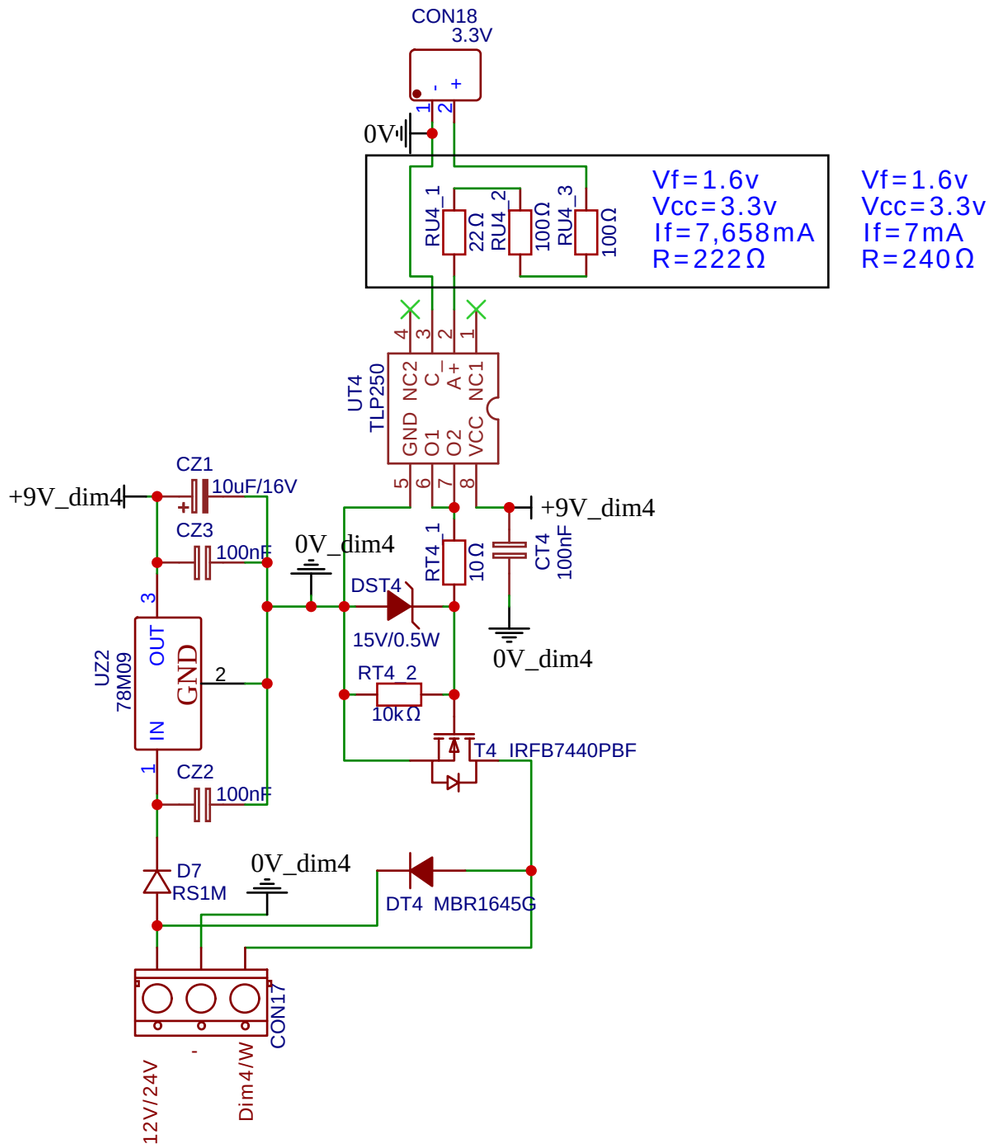

TITLE: Sheet_1	REV: 1.0
Company: Your Company	Sheet: 1/1
Date: 2020-07-21 Drawn By: JLUK	