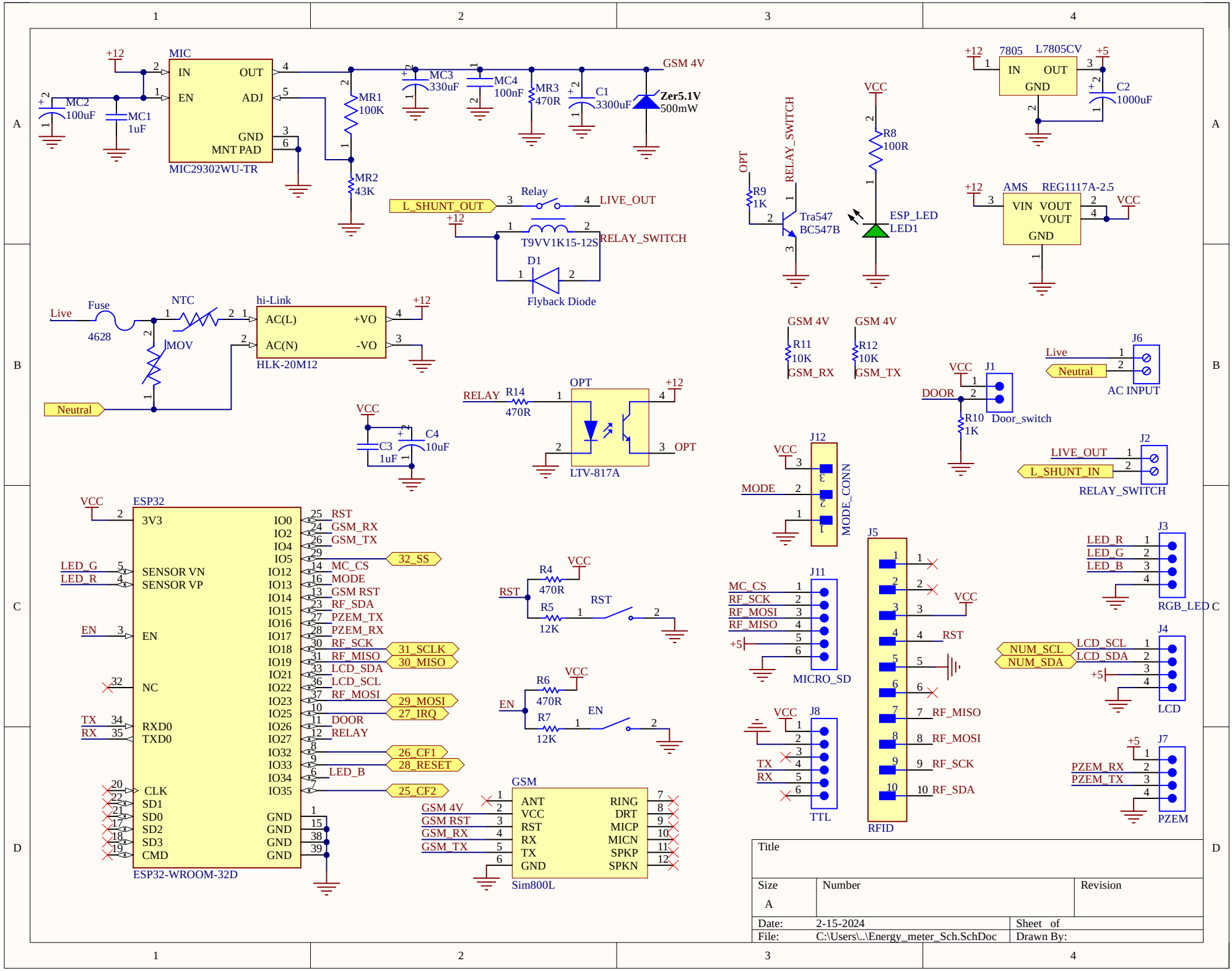
MIC
MIC29302WU-TR
IN
OUT
EN
ADJ
GND
MNT PAD
+12
MC2
100uF
MC1
1uF
MR1
100K
MR2
43K
MC3
330uF
MC4
100nF
MR3
470R
C1
3300uF
GSM 4V
Zer5.1V
500mW
L_SHUNT_OUT
Relay
LIVE_OUT
T9VV1K15-12S
RELAY_SWITCH
D1
Flyback Diode
7805
L7805CV
C2
1000uF
+5
AMS
REG1117A-2.5
VIN
VOUT
VCC
OPT
R9
1K
Tra547
BC547B
RELAY_SWITCH
R8
100R
ESP_LED
LED1
Live
Fuse
4628
NTC
MOV
Neutral
hi-Link
HLK-20M12
AC(L)
AC(N)
+VO
-VO
C3
1uF
C4
10uF
RELAY
R14
470R
LTV-817A
R11
10K
GSM_RX
R12
10K
GSM_TX
J6
AC INPUT
J1
DOOR
R10
1K
Door_switch
J2
L_SHUNT_IN
RELAY_SWITCH
J12
MODE
MODE_CONN
ESP32
3V3
SENSOR VN
SENSOR VP
EN
NC
RXD0
TXD0
CLK
SD1
SD0
SD2
SD3
CMD
IO0
IO2
IO4
IO5
IO12
IO13
IO14
IO15
IO16
IO17
IO18
IO19
IO21
IO22
IO23
IO25
IO26
IO27
IO32
IO33
IO34
IO35
GND
RST
GSM_RX
GSM_TX
32_SS
MC_CS
MODE
GSM RST
RF_SDA
PZEM_TX
PZEM_RX
RF_SCK
31_SCLK
RF_MISO
30_MISO
LCD_SDA
LCD_SCL
RF_MOSI
29_MOSI
27_IRQ
DOOR
RELAY
26_CF1
28_RESET
LED_B
25_CF2
LED_G
LED_R
TX
RX
ESP32-WROOM-32D
R4
470R
R5
12K
R6
470R
R7
12K
GSM
ANT
VCC
RST
RX
TX
GND
RING
DRT
MICP
MICN
SPKP
SPKN
Sim800L
J11
MC_CS
RF_SCK
RF_MOSI
RF_MISO
MICRO_SD
J8
TTL
J5
RFID
J3
RGB_LED
J4
NUM_SCL
NUM_SDA
LCD_SCL
LCD_SDA
LCD
J7
PZEM
Title
Size
A
Number
Revision
Date:
2-15-2024
Sheet of
File:
C:\Users\..\Energy_meter_Sch.SchDoc
Drawn By:

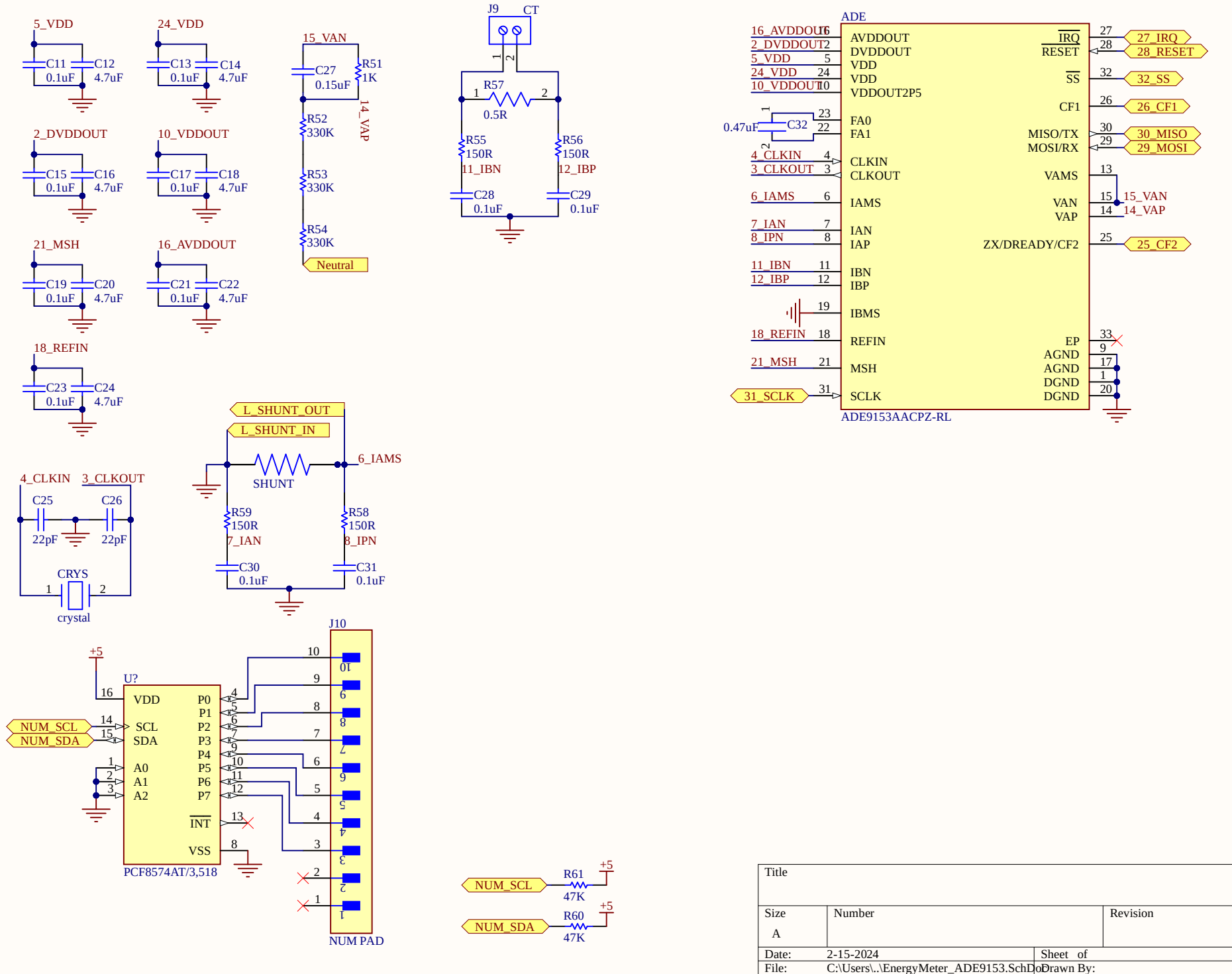
5_VDD
C11 0.1uF
C12 4.7uF
24_VDD
C13 0.1uF
C14 4.7uF
15_VAN
C27 0.15uF
R51 1K
R52 330K
R53 330K
R54 330K
14_VAP
Neutral
J9
CT
R57 0.5R
R55 150R
11_IBN
R56 150R
12_IBP
C28 0.1uF
C29 0.1uF
2_DVDDOUT
C15 0.1uF
C16 4.7uF
10_VDDOUT
C17 0.1uF
C18 4.7uF
21_MSH
C19 0.1uF
C20 4.7uF
16_AVDDOUT
C21 0.1uF
C22 4.7uF
18_REFIN
C23 0.1uF
C24 4.7uF
ADE
16_AVDDOUT
2_DVDDOUT
5_VDD
24_VDD
10_VDDOUT
AVDDOUT
DVDDOUT
VDD
VDD
VDDOUT2P5
0.47uF
C32
FA0
FA1
4_CLKIN
3_CLKOUT
CLKIN
CLKOUT
6_IAMS
IAMS
7_IAN
8_IPN
IAN
IAP
11_IBN
12_IBP
IBN
IBP
IBMS
18_REFIN
REFIN
21_MSH
MSH
31_SCLK
SCLK
IRQ
RESET
SS
CF1
MISO/TX
MOSI/RX
VAMS
VAN
VAP
ZX/DREADY/CF2
EP
AGND
AGND
DGND
DGND
27_IRQ
28_RESET
32_SS
26_CF1
30_MISO
29_MOSI
15_VAN
14_VAP
25_CF2
ADE9153AACPZ-RL
L_SHUNT_OUT
L_SHUNT_IN
SHUNT
6_IAMS
R59 150R
7_IAN
R58 150R
8_IPN
C30 0.1uF
C31 0.1uF
4_CLKIN
3_CLKOUT
C25 22pF
C26 22pF
CRYS
crystal
+5
U?
VDD
SCL
SDA
A0
A1
A2
P0
P1
P2
P3
P4
P5
P6
P7
INT
VSS
NUM_SCL
NUM_SDA
PCF8574AT/3,518
J10
NUM PAD
NUM_SCL
R61 47K
NUM_SDA
R60 47K
Title
Size
A
Number
Revision
Date: 2-15-2024
Sheet of
File: C:\Users\..\EnergyMeter_ADE9153.SchDoc
Drawn By:

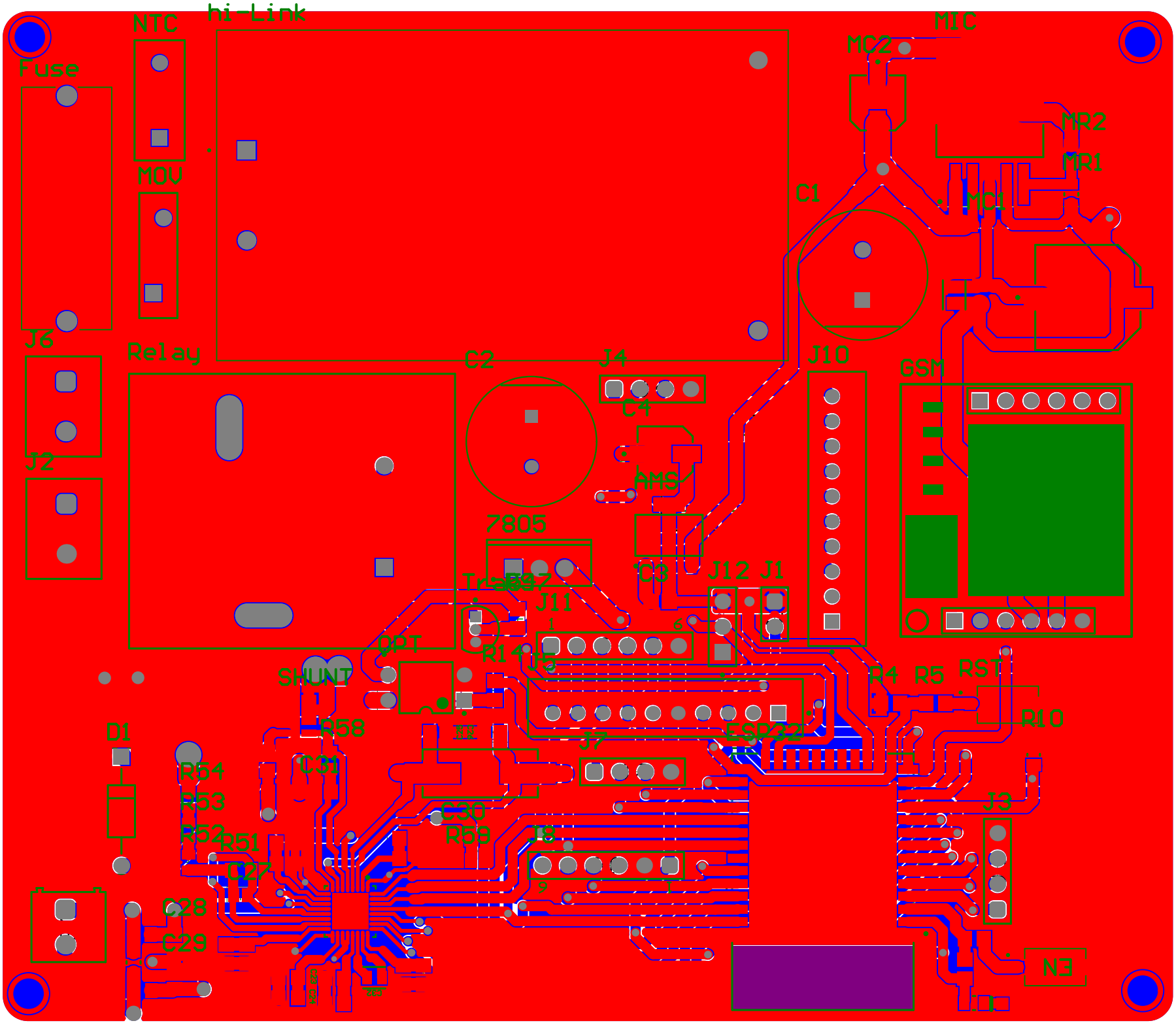
hi-Link
NTC
Fuse
MOV
MIC
MC2
MR2
MR1
MC1
C1
J6
Relay
C2
J4
C4
J10
GSM
J2
AMS
7805
C3
J12
J1
Trs332
J11
R14
J9
DPT
SHUNT
R58
D1
R54
R53
R52
R51
C31
C27
C28
C29
C30
R59
J8
J7
ESP32
R4
R5
RST
R10
J3
EN