ALL DIMENSIONS ARE IN mm. PLEASE ASK IF ANY DOUBT

TOOL WEIGHT :-

COMP NAME:- BEVEL HSG

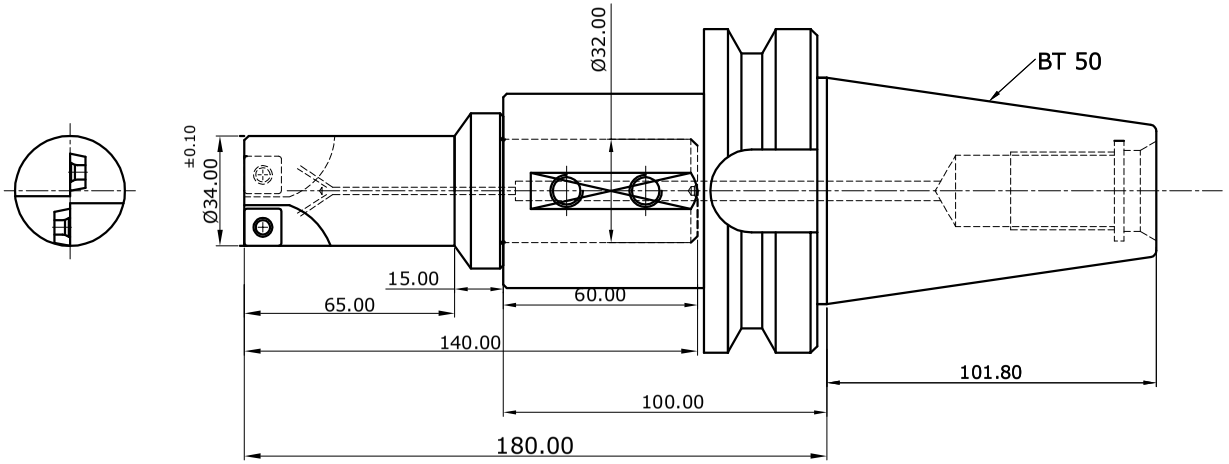

THIS DRAWING & DESIGN IS THE PROPERTY OF **ALFA TOOLINGS** AND MUST NOT BE COPIED OR LENT WITHOUT THEIR PERMISSION IN WRITING.

NOTE:

- HARDNESS 55~58 HRC CASE HARDENED
- REMOVE ALL SHARP EDGES(EXCEPT TIP SEAT)
- TOOL IS DYNAMICALLY BALANCED TO 2.5 gm FOR 12000 rpm.

S.NO.	DESCRIPTION	QTY.	MAKE
01	INSERT :- SPMG 110408	02	

		DRAWN	MRP	06/03/2024
COMP. NAME	BEVEL HSG	CHD.BY	GBS	06/03/2024
PART NO		APD.BY	.	.

CUTTING HAND:- RH

MATERIAL:-

CUST. CODE: AT/HO/185

SCALE:- 1:1

DESCRIPTION:-

CENTER CUTTING SPOT FACE Ø34.00 X GPL 180.00 X BT 50.

ALFA TOOLINGS

DRAWING. NO. AT-A-2228