REVISION RECORD			
LTR	ECO NO:	APPROVED:	DATE:

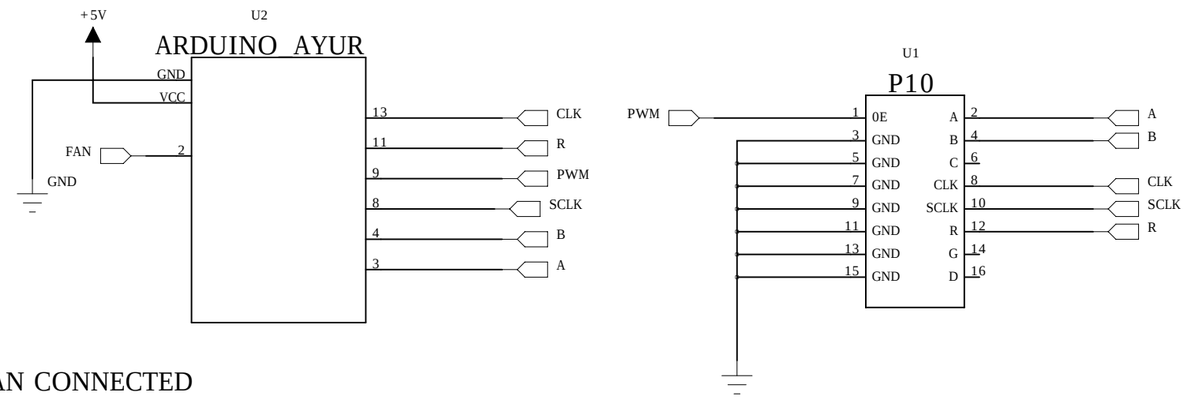

RELAY BOARD TO FAN CONNECTED

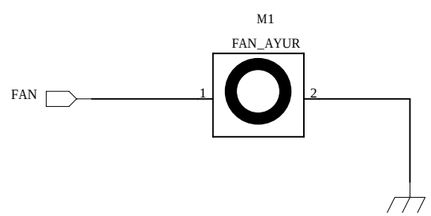

DRAWN: HARISH	DATED: 20/7/18
CHECKED: <Checked By>	DATED: <Checked Date>
QUALITY CONTROL: <QC By>	DATED: <QC Date>
RELEASED: <Released By>	DATED: <Release Date>

COMPANY: BRAHM WORKS PRIVATE LIMITED

TITLE: AYURVEDHA

CODE:	SIZE:	DRAWING NO:	REV:
<Code>	B	<Drawing Number>	<Revision>

SCALE: <Scale>

SHEET: 1 OF 1