Agenda

- Command line arguments and Argument arrays
- **`strtok()`** & **`strtok_r()`** library functions for string tokenization
- Argument array creation (version-I, version-II, version-III)

Command line arguments and Argument arrays

- **Token** is a string of characters containing no white space unless quotation marks are used to group tokens.

Command line arguments and Argument arrays

- **Token** is a string of characters containing no white space unless quotation marks are used to group tokens.
- A **command line** consists of tokens (the arguments) that are separated by white space: blanks, tabs or a backslash (\) at the end of a line.

Command line arguments and Argument arrays

- **Token** is a string of characters containing no white space unless quotation marks are used to group tokens.
- A **command line** consists of tokens (the arguments) that are separated by white space: blanks, tabs or a backslash (\) at the end of a line.
- When a user enters a command line corresponding to a C executable program, the **shell** parses the command line into tokens and passes the result to the program in the form of an argument array.

Command line arguments and Argument arrays

- **Token** is a string of characters containing no white space unless quotation marks are used to group tokens.
- A **command line** consists of tokens (the arguments) that are separated by white space: blanks, tabs or a backslash (\) at the end of a line.
- When a user enters a command line corresponding to a C executable program, the **shell** parses the command line into tokens and passes the result to the program in the form of an argument array.
- An **argument array** is an array of pointers to strings. The end of the array is marked by an entry containing a `NULL` pointer.

Command line arguments and Argument arrays

- **Token** is a string of characters containing no white space unless quotation marks are used to group tokens.
- A **command line** consists of tokens (the arguments) that are separated by white space: blanks, tabs or a backslash (\) at the end of a line.
- When a user enters a command line corresponding to a C executable program, the **shell** parses the command line into tokens and passes the result to the program in the form of an argument array.
- An **argument array** is an array of pointers to strings. The end of the array is marked by an entry containing a `NULL` pointer.

Example

Consider the command line input: `$ mine -c 10 2.0`

- Four tokens:(1) `mine`, (2) `-c`, (3) `10`, (4) `20`
- First token is the name of the **command** or **executable**
- The `mine` program might start with the following line

```
int main(int argc, char *argv[])
```

- `argc` parameter contains the number of command-line tokens or arguments and `argv` is an array of pointers to the command-line tokens.

The `argv` is an example of an **argument array**

Argument array structure

An argument array is an array of pointers to strings. The end of the array is marked by an entry containing a `NULL` pointer.

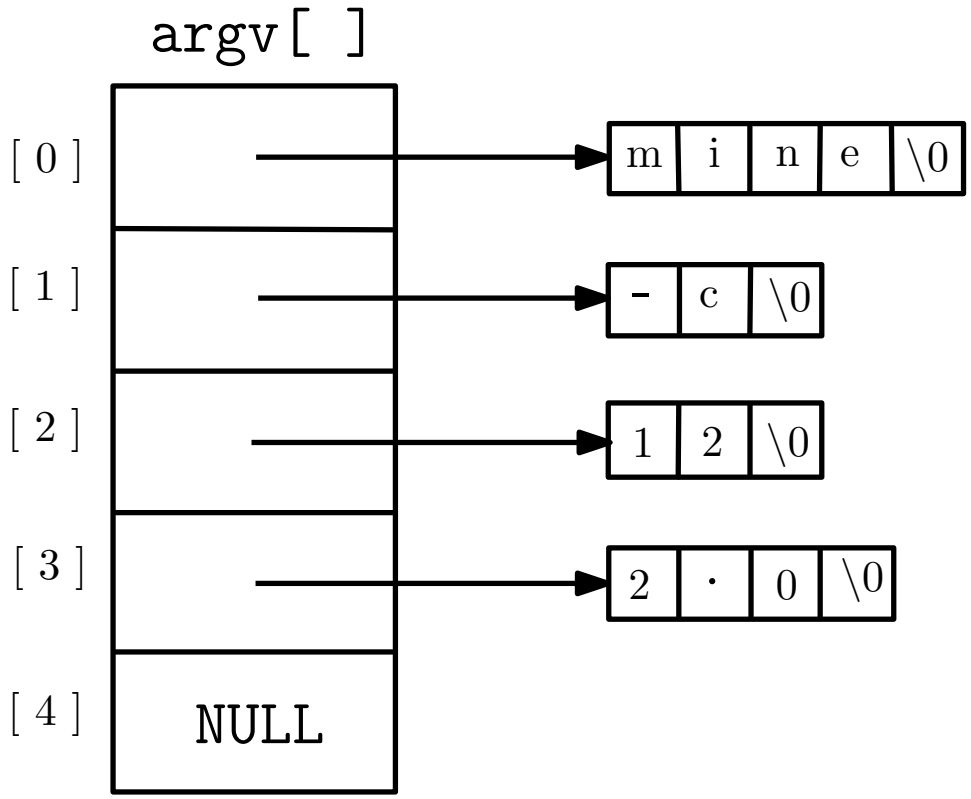

The `argv` array for the call `mine -c 10 2.0`

Argument arrays are also useful for handling a variable number of arguments in calls to **`execvp`** and for handling environment variables.

Printing all command line arguments to standard output

```
#include<stdio.h>
int main(int argc, char *argv[])
{
 int i;
 for(i=0;i<argc;i++)
        printf("argv[%d]: %s\n",i,argv[i]);
 return 0;
}
```

Alternative code for the argument processing loop;

Printing all command line arguments to standard output

```
#include<stdio.h>
int main(int argc, char *argv[])
{
 int i;
 for(i=0;i<argc;i++)
        printf("argv[%d]: %s\n",i,argv[i]);
 return 0;
}
```

Alternative code for the argument processing loop;

```
#include<stdio.h>
int main(int argc, char *argv[])
{
 int i;
 for(i=0;argv[i]!=NULL;i++)
        printf("argv[%d]: %s\n",i,argv[i]);
 return 0;
}
```

C Library Function `strtok()`

```
#include <string.h>

char *strtok(char *str, const char *delim);
```

- **`strtok`** splits a string into tokens.
- On the first call to **`strtok()`** the string to be parsed should be specified in **`str`**.
- In each subsequent call that should parse the same string, **`str`** must be NULL. (i.e. the first call to **`strtok`** is different from subsequent calls)
- The second argument to **`strtok`** is a string of allowed token delimiters.

A delimiter is one or more characters that separate text strings. Common delimiters are commas (,), semicolon (;), colon (:), quotes (", '), braces ({}), pipes (|), hyphen (-), or slashes (/ \) etc.

- Each successive call to **`strtok`** returns the start of the next token and inserts a '\0' at the end of the token being returned. The **`strtok`** function returns NULL when it reaches the end of the string, **`str`**.
- **`strtok`** does not allocate new space for the tokens, but rather it tokenizes **`str`** in place. Thus, if you need to access the original **`str`** after calling **`strtok`**, you should save a copy of the string.

Example: strtok() function

```
#include<stdio.h>
#include<string.h>
int main()
{
    char str[] ="ITER-IBCS-SHM-SUM-IDS";
    char *token;
    token=strtok(str,"-");
    while (token!=NULL){
        printf("Token=%s\n",token);
        token=strtok(NULL,"-");
    }
    return 0;
}
```

Example: strtok() to Count Tokens

```
#include<stdio.h>
#include<string.h>
int main()
{
   char str[]="ITER-IBCS-SHM-SUM-IDS";
   char *delimiters="-";
   int numtokens;
   /* count the number of tokens in str */
   if (strtok(str, delimiters) != NULL)
      for(numtokens = 1; strtok(NULL, delimiters) != NULL;
          numtokens++) ;

  printf("Number of tokens=%d\n",numtokens);
  return 0;
}
```

A case with `strtok()` Function

What will be the output of the given code sample?

```
int main()
{
    char str[] ="ITER-IBCS-SOA-SUM-ids";
    char ptr[] ="iter-ibcs-soa-sum-ids-CSE";
    char *token,*ptoken;
    token=strtok(str,"-");
    ptoken=strtok(ptr,"-");
    while (token!=NULL){
        printf("Token=%s\n",token);
        token=strtok(NULL,"-");
    }
    return 0;
}
```

A case with `strtok()` Function

What will be the output of the given code sample?

```
int main()
{
    char str[] ="ITER-IBCS-SOA-SUM-ids";
    char ptr[] ="iter-ibcs-soa-sum-ids-CSE";
    char *token,*ptoken;
    token=strtok(str,"-");
    ptoken=strtok(ptr,"-");
    while (token!=NULL){
        printf("Token=%s\n",token);
        token=strtok(NULL,"-");
    }
    return 0;
}
```

The behavior that causes the above code to fail also prevents **`strtok`** from being used safely in programs with multiple threads. If one thread is in the process of using **`strtok`** and a second thread calls **`strtok`**, subsequent calls may not behave properly. POSIX defines a thread-safe function, **`strtok_r`**, to be used in place of **`strtok`**. The **`_r`** stands for reentrant, indicating the function can be reentered (called again) before a previous call finishes.

Reason For Above Behavior of `strtok()`

- Because of **`strtok`** definition, it must use an internal static variable to keep track of the current location of the next token to parse within the string.

- However, when calls to strtok with different parse strings occur in the same program, the parsing of the respective strings may interfere because there is only one variable for the location.

C Library Function `strtok_r()`

```
#include <string.h>

char *strtok_r(char *str, const char *delim, char **saveptr
    );
```

The `strtok()` and `strtok_r()` functions return a pointer to the next token, or `NULL` if there are no more tokens.

- **`strtok_r`** splits a string into tokens. The **`strtok_r`** function is a reentrant version **`strtok`**.
- The **`saveptr`** argument is a pointer to a **`char`** variable that is used internally by **`strtok_r()`** in order to maintain context between successive calls that parse the same string.
- Different strings may be parsed concurrently using sequences of calls to **`strtok_r()`** that specify different **`saveptr`** arguments.

Example: strtok_r() function

```
#include <stdio.h>
#include <string.h>
int main()
{
   char str[] ="Lesson-plan-USP-DOS-FML-PLC";
   printf("Entered strin:::");
   puts(str);
   char *token;
   char *last;
   token = strtok_r(str, "-", &last);
   while (token!=NULL) {
      printf("Token:%s\n", token);
      printf("\t\tRemaining part of the string:%s\n",last);
      token = strtok_r(NULL, "-", &last);
   }
   return (0);
}
```

strtok() vs strtok_r()

You know the behavior of **strtok()**. An incorrect use of **strtok** to determine the next tokens in the string.

```
int main() {
    char str[] ="ITER-IBCS-SOA-SUM-ids";
    char ptr[] ="iter-ibcs-soa-sum-ids-CSE";
    char *token,*ptoken;
    token=strtok(str,"-");
    ptoken=strtok(ptr,"-");
    while (token!=NULL){
        printf("Token=%s\n",token);
        token=strtok(NULL,"-");
    }    return 0; }
```

Resolving the issues using **strtok_r()**

```
int main() {
    char str[] ="ITER-IBCS-SOA-SUM-ids";
    char ptr[] ="iter-ibcs-soa-sum-ids-CSE";
    char *token,*ptoken,*sptr1,*sptr2;
    token=strtok_r(str,"-",&sptr1);
    ptoken=strtok_r(ptr,"-",&sptr2);
    while (token!=NULL){
        printf("Token=%s\n",token);
        token=strtok_r(NULL,"-",&sptr1);
    }    return 0; }
```

Exercise: `strtok()` vs `strtok_r()`

Develop a program to determine the average number of words per line.

Exercise: `strtok()` vs `strtok_r()`

Develop a program to determine the average number of words per line.

Sample input to the program: a string of the form `This is a line of text\n It is the second line \n then next line"`. Here, \n is the newline character and *space*(“ ”) is the word separator.

Exercise: strtok() vs strtok_r()

Develop a program to determine the average number of words per line.

Sample input to the program: a string of the form `This is a line of text\n It is the second line \n then next line"`. Here, \n is the newline character and *space*(" ") is the word separator.

```
#define LINE_DELIMITERS "\n"
#define WORD_DELIMITERS " "
static int wordcount(char *s) {
....................
return count;}
double wordaverage(char *s) {
int linecount = 1;
char *nextline;
....................
words = wordcount(nextline);
....................
return (double)words/linecount;
}
int main(){
  char str[]="This is a line of text\n It is the second line \n
       then next line";
  double wordavg=wordaverage(str);
  printf("Word average=%f\n",wordavg);
  return 0;}
```