MPCA Project

TITLE OF THE PROJECT:

Team Members:

Sl. No	Name	SRN
1	Rushikesh Patil	PES1UG24AM394
2	Sharanabasava	PES1UG24AM399
3	Harish	PES1UG24AM369

Components used:

- Arduino UNO
- IR Sensor (Pet Detection)
- Ultrasonic Sensor (HC-SR04)
- RTC Module (DS3231)
- Servo Motor (SG90)
- LCD Display (16x2 with I2C)
- LDR Module
- LED
- Resistor (220Ω)
- Breadboard
- Jumper Wires
- Power Supply (for servo motor)

Explanation about the project :

The Automatic Pet Feeder System is designed to feed pets at scheduled times automatically using Arduino. The RTC module keeps track of real time, and when the preset feeding time is reached, the system activates. An IR sensor is used to detect the presence of the pet. If the pet is present, food is dispensed immediately using a servo motor. If the pet is not detected, the system waits for 10 seconds and then feeds anyway to ensure the pet does not miss its meal.

An ultrasonic sensor is used to measure the level of food in the container and display it as a percentage. An LDR sensor controls an LED, which turns ON in dark conditions to provide visibility.

All system information such as time, food level, and pet presence is displayed on an LCD screen. This system ensures reliability, automation, and convenience for pet feeding.

Circuit Diagram:

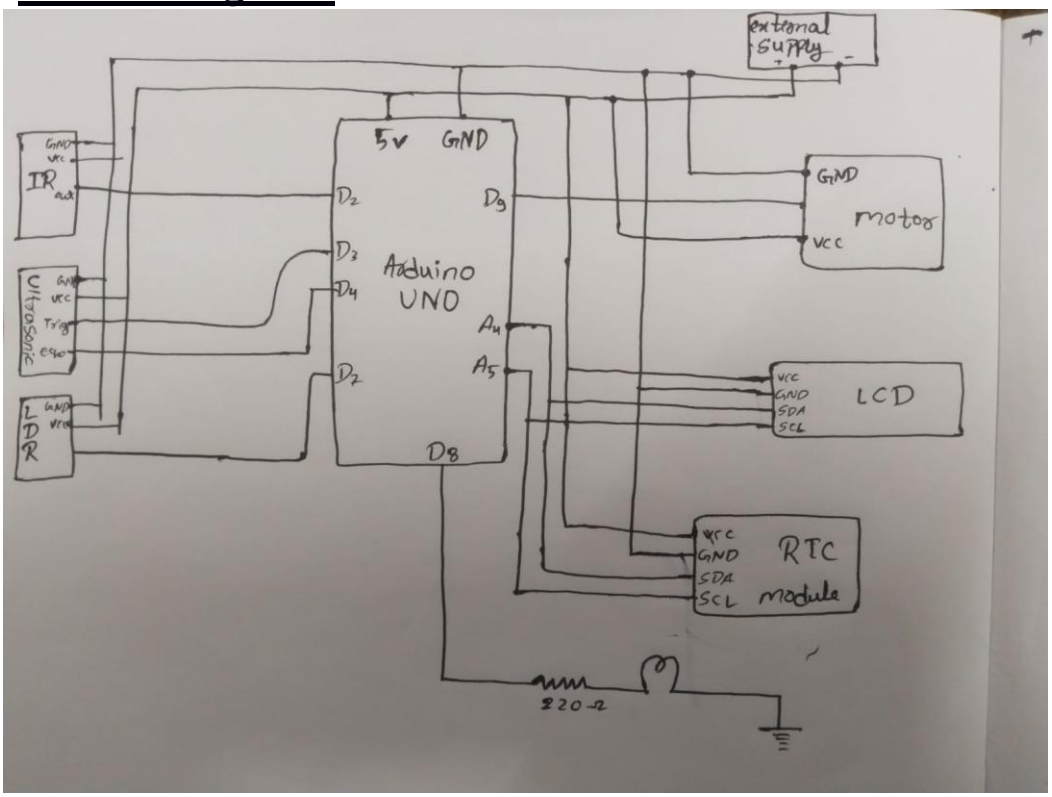

Pseudocode:

```
START
Initialize LCD, RTC, IR sensor, Ultrasonic sensor, LDR, LED, Servo
SET feeding time (hour and minute)
SET fed = false
LOOP forever:
   READ current time from RTC
   READ IR sensor → petPresent
   READ ultrasonic sensor → distance
   CALCULATE food percentage
   READ LDR sensor → lightState
   IF dark THEN
      TURN ON LED
   ELSE
      TURN OFF LED
   DISPLAY time, food level, and pet status on LCD
   IF (current time == feeding time AND fed == false):
      DISPLAY "Feeding Time"
      IF petPresent == TRUE THEN
         DISPLAY "Pet Detected"
         ACTIVATE servo (feed food)
      ELSE
         DISPLAY "Waiting for Pet"
         START timer (10 seconds)
         WHILE timer not finished:
            CHECK IR sensor
            IF pet detected THEN
               BREAK
         DISPLAY status (Pet Arrived / No Pet)
         ACTIVATE servo (feed food)
      SET fed = true
   IF (time == 12:00 AM):
      RESET fed = false
END LOOP
END
```

Output Pictures with explanations:

1. Normal Display Mode

The LCD shows the current time, food level percentage, and pet presence status (P:Y or P:N).

2. Waiting Mode

If no pet is detected, the system displays "Waiting Pet..." and waits for 10 seconds.

3. Pet Detected

When the pet is detected by the IR sensor, the LCD displays "Pet Arrived" and feeding starts immediately.

4. Feeding Action

The servo motor rotates to dispense food, and the LCD displays "Feeding...".

5. Completion

After feeding, the LCD shows "Done!", indicating the process is complete.