Find the voltage across the capacitors (V_1 & V_2) in the below circuit under dc conditions.

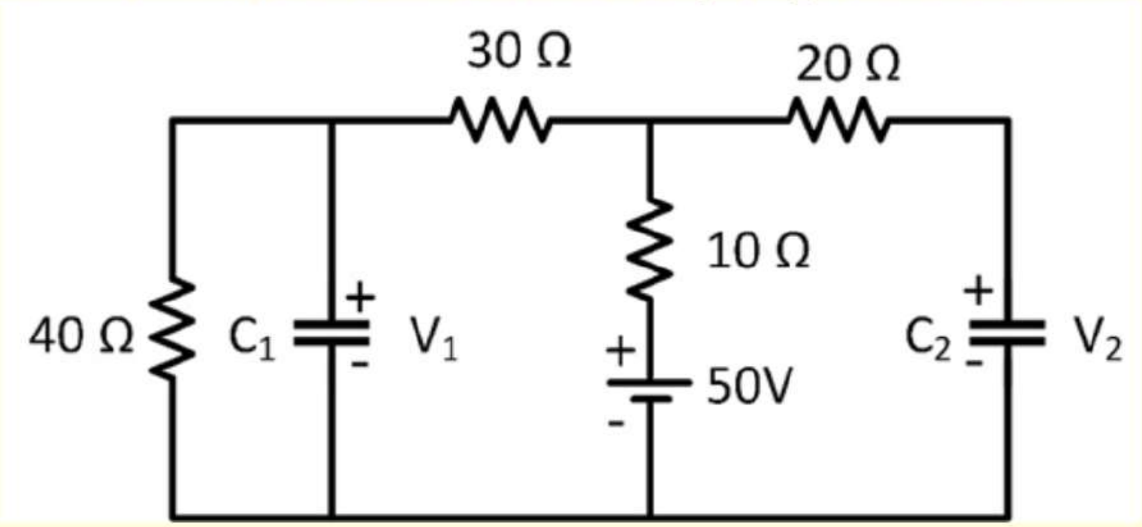
30 Ω
20 Ω
10 Ω
40 Ω
C_1
+
-
V_1
+
-
50V
C_2
+
-
V_2

Find Vo for the circuit shown.

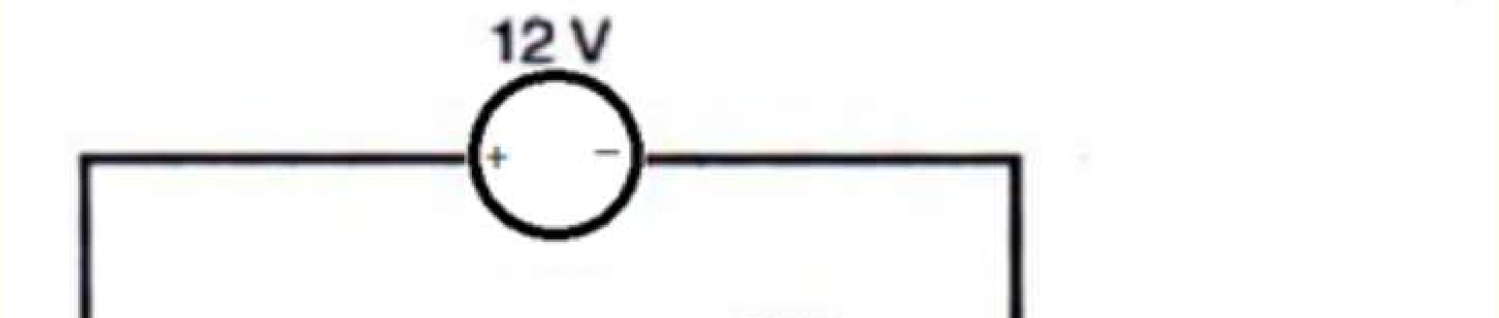
12 V
+
−
6 kΩ
6 V
−
+
+
4 kΩ
6 mA
6 kΩ
V_o
−

Find the V_o in the circuit by using superposition principle.

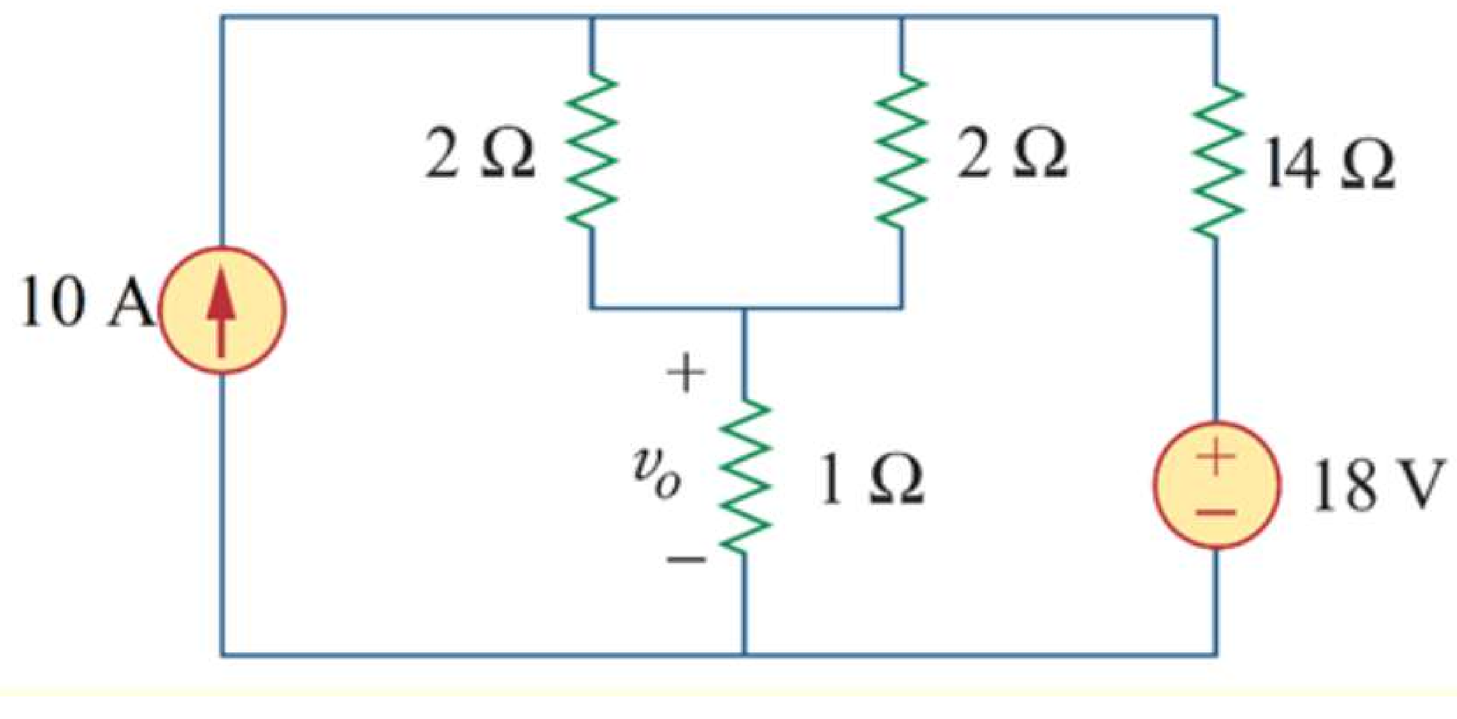
10 A
2 Ω
2 Ω
14 Ω
+
v_o
−
1 Ω
+
−
18 V

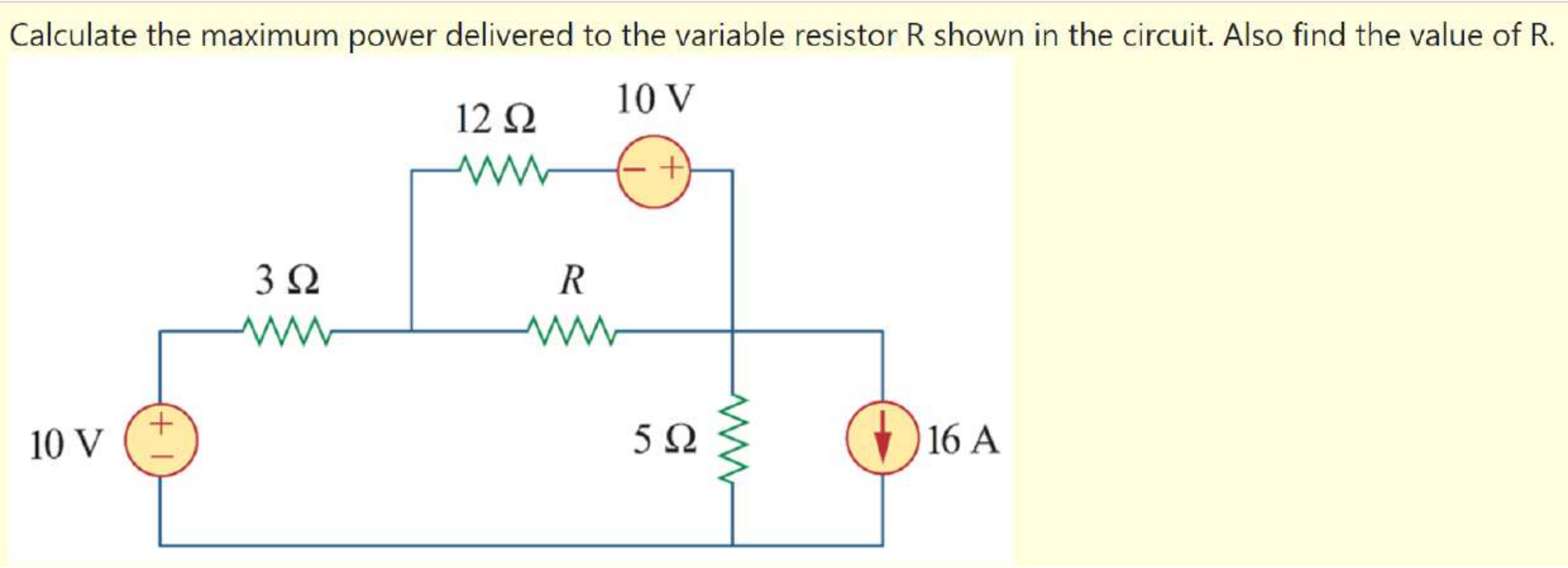

Calculate the maximum power delivered to the variable resistor R shown in the circuit. Also find the value of R.

12 Ω
10 V
3 Ω
R
10 V
5 Ω
16 A

Calculate Io in the circuit.

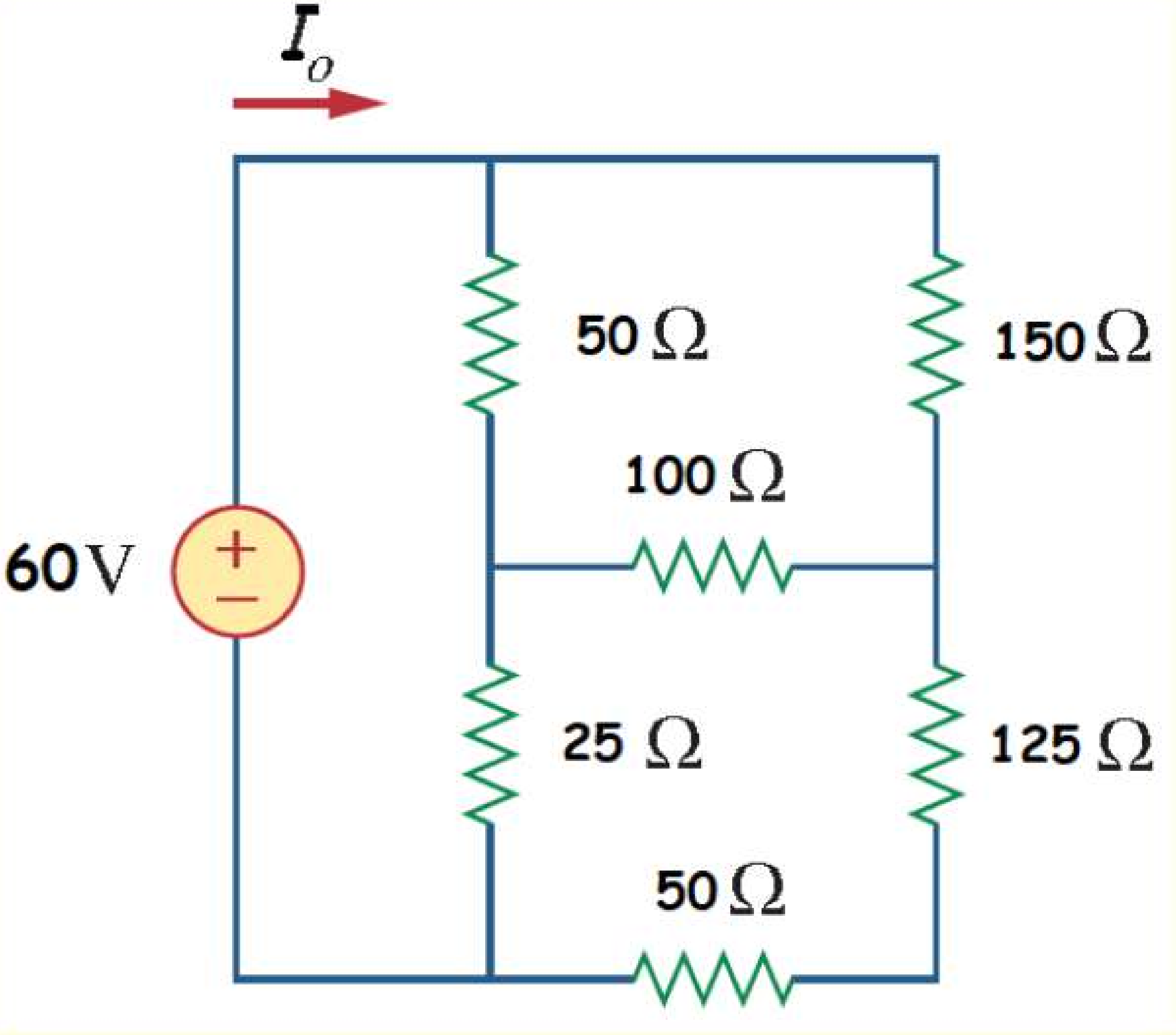
I_o
60 V
+
−
50 Ω
150 Ω
100 Ω
25 Ω
125 Ω
50 Ω

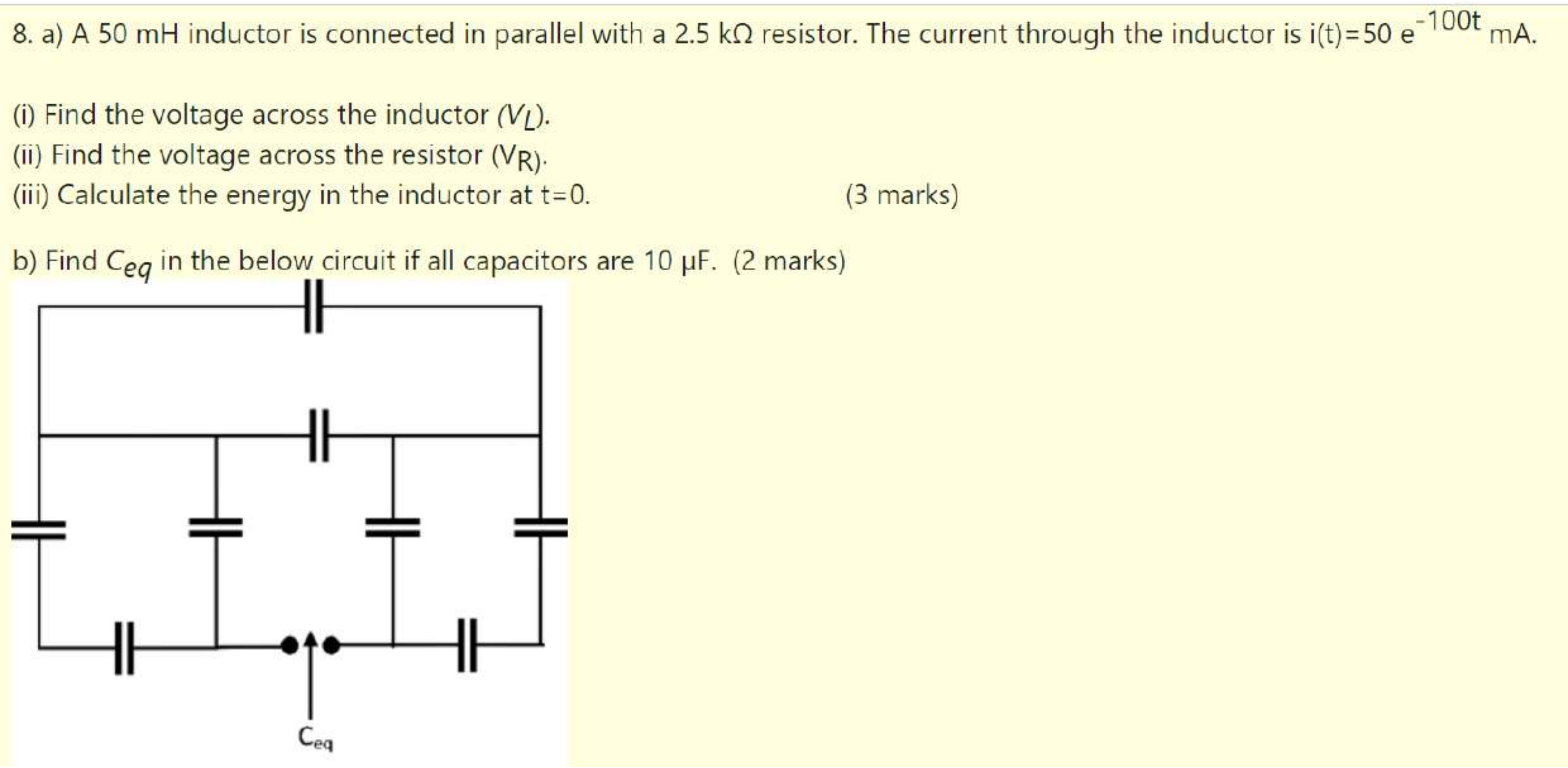

8. a) A 50 mH inductor is connected in parallel with a 2.5 kΩ resistor. The current through the inductor is $i(t)=50\ e^{-100t}$ mA.

(i) Find the voltage across the inductor (V_L).
(ii) Find the voltage across the resistor (V_R).
(iii) Calculate the energy in the inductor at t=0. (3 marks)

b) Find C_{eq} in the below circuit if all capacitors are 10 μF. (2 marks)

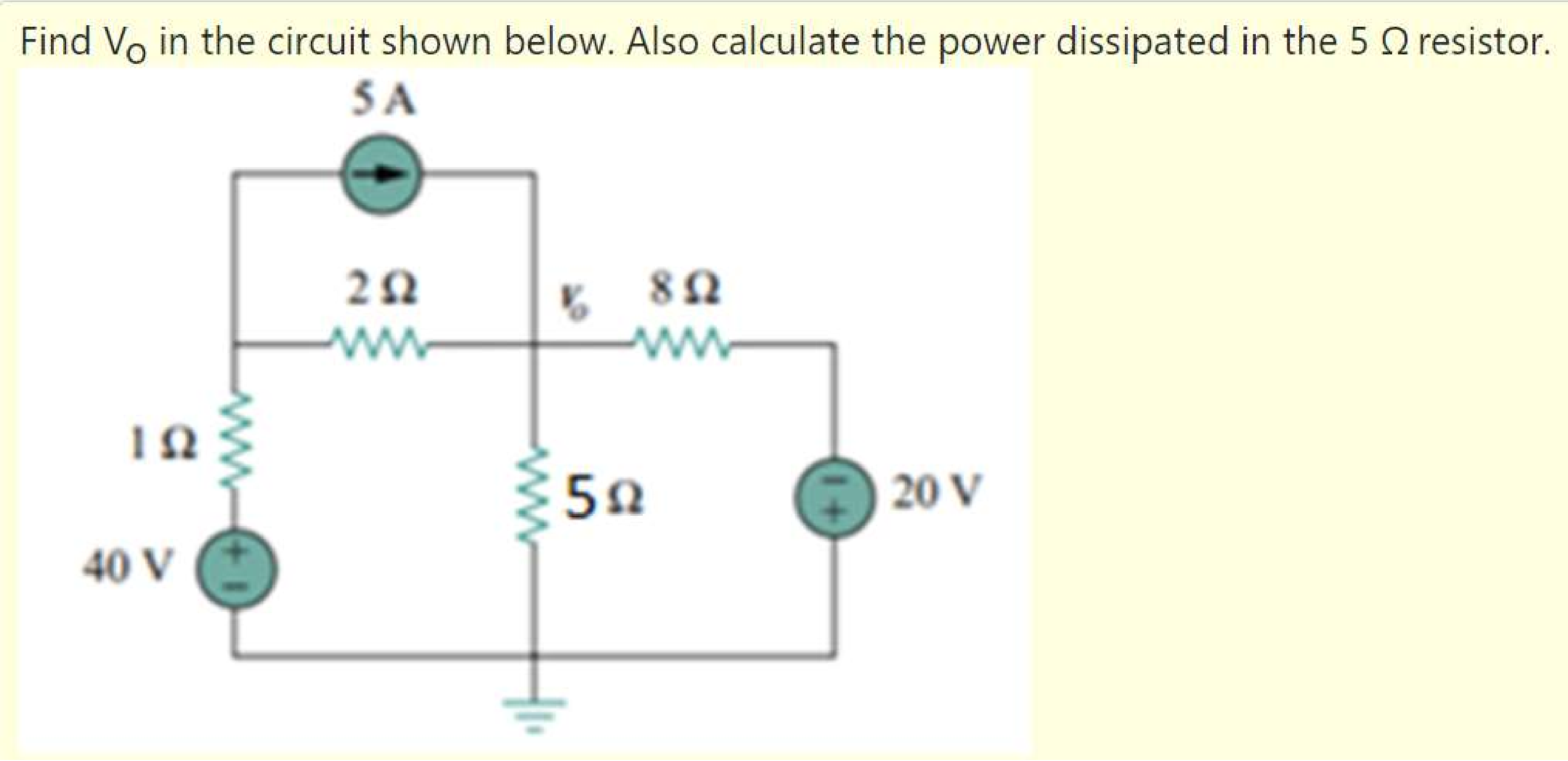

Find V_o in the circuit shown below. Also calculate the power dissipated in the 5 Ω resistor.

5 A
2 Ω
V_o
8 Ω
1 Ω
5 Ω
20 V
40 V

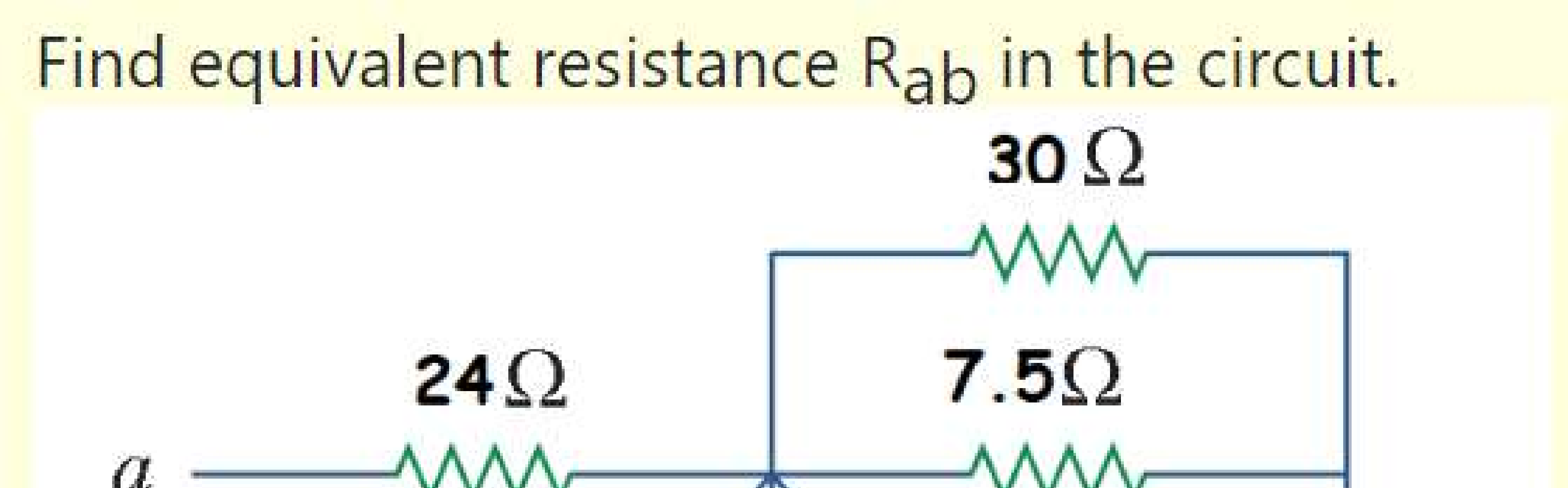

Find equivalent resistance R_{ab} in the circuit.

30 Ω
24Ω
7.5Ω
a
27Ω
30 Ω
R_{ab}
1.5Ω
13.5Ω
3 Ω
b