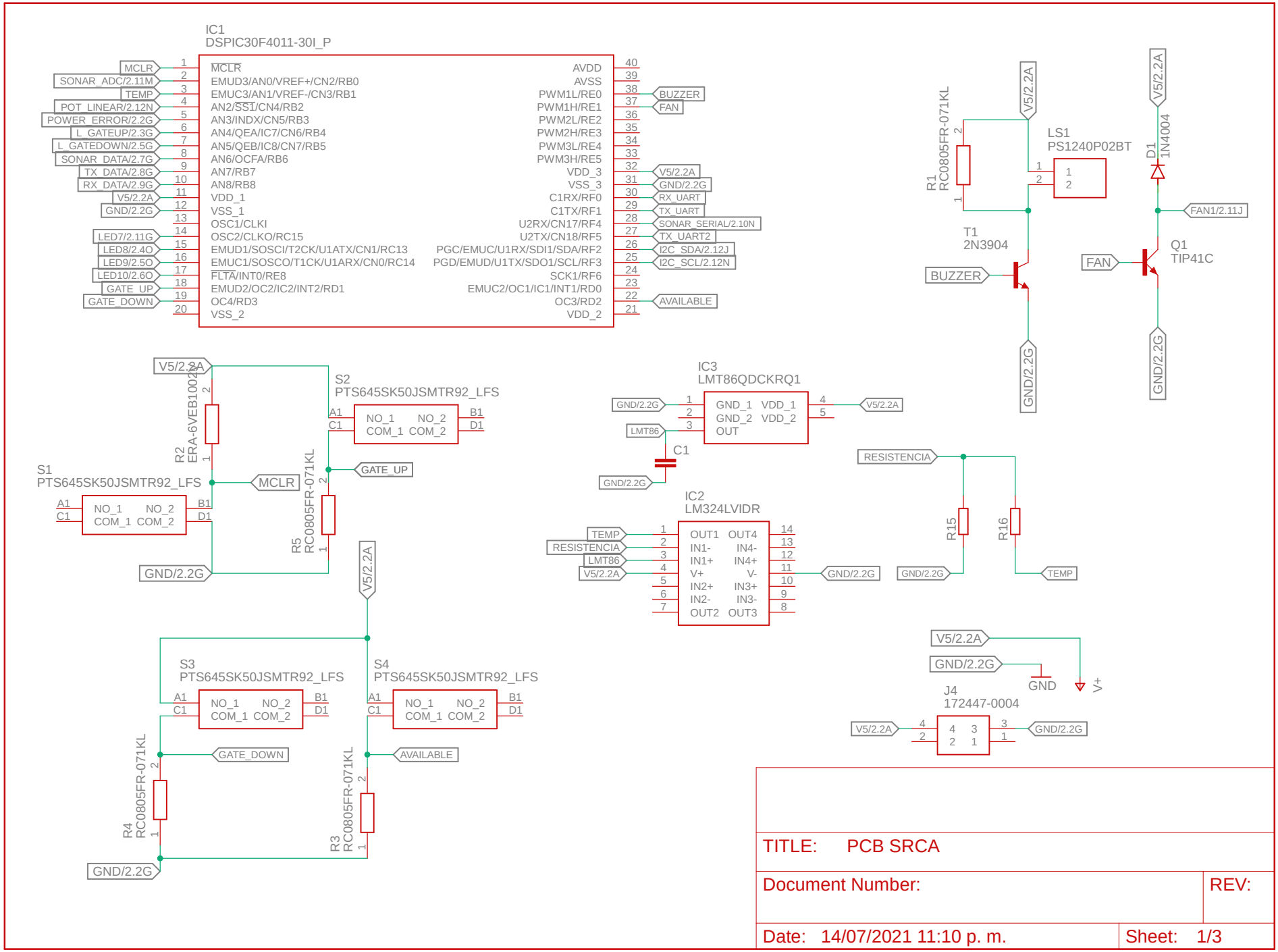
IC1
DSPIC30F4011-30I_P
MCLR
SONAR_ADC/2.11M
TEMP
POT_LINEAR/2.12N
POWER_ERROR/2.2G
L_GATEUP/2.3G
L_GATEDOWN/2.5G
SONAR_DATA/2.7G
TX_DATA/2.8G
RX_DATA/2.9G
V5/2.2A
GND/2.2G
LED7/2.11G
LED8/2.4O
LED9/2.5O
LED10/2.6O
GATE_UP
GATE_DOWN
MCLR
EMUD3/AN0/VREF+/CN2/RB0
EMUC3/AN1/VREF-/CN3/RB1
AN2/SS1/CN4/RB2
AN3/INDX/CN5/RB3
AN4/QEA/IC7/CN6/RB4
AN5/QEB/IC8/CN7/RB5
AN6/OCFA/RB6
AN7/RB7
AN8/RB8
VDD_1
VSS_1
OSC1/CLKI
OSC2/CLKO/RC15
EMUD1/SOSCI/T2CK/U1ATX/CN1/RC13
EMUC1/SOSCO/T1CK/U1ARX/CN0/RC14
FLTA/INT0/RE8
EMUD2/OC2/IC2/INT2/RD1
OC4/RD3
VSS_2
AVDD
AVSS
PWM1L/RE0
PWM1H/RE1
PWM2L/RE2
PWM2H/RE3
PWM3L/RE4
PWM3H/RE5
VDD_3
VSS_3
C1RX/RF0
C1TX/RF1
U2RX/CN17/RF4
U2TX/CN18/RF5
PGC/EMUC/U1RX/SDI1/SDA/RF2
PGD/EMUD/U1TX/SDO1/SCL/RF3
SCK1/RF6
EMUC2/OC1/IC1/INT1/RD0
OC3/RD2
VDD_2
BUZZER
FAN
V5/2.2A
GND/2.2G
RX_UART
TX_UART
SONAR_SERIAL/2.10N
TX_UART2
I2C_SDA/2.12J
I2C_SCL/2.12N
AVAILABLE
R1
RC0805FR-071KL
LS1
PS1240P02BT
D1
1N4004
FAN1/2.11J
T1
2N3904
BUZZER
Q1
TIP41C
FAN
S1
PTS645SK50JSMTR92_LFS
R2
ERA-6VEB1002
S2
PTS645SK50JSMTR92_LFS
R5
RC0805FR-071KL
GATE_UP
IC3
LMT86QDCKRQ1
GND/2.2G
LMT86
C1
IC2
LM324LVIDR
TEMP
RESISTENCIA
LMT86
V5/2.2A
GND/2.2G
R15
R16
TEMP
S3
PTS645SK50JSMTR92_LFS
S4
PTS645SK50JSMTR92_LFS
GATE_DOWN
AVAILABLE
R4
RC0805FR-071KL
R3
RC0805FR-071KL
GND/2.2G
V5/2.2A
GND/2.2G
GND
V+
J4
172447-0004
V5/2.2A
GND/2.2G
TITLE: PCB SRCA
Document Number:
REV:
Date: 14/07/2021 11:10 p. m.
Sheet: 1/3

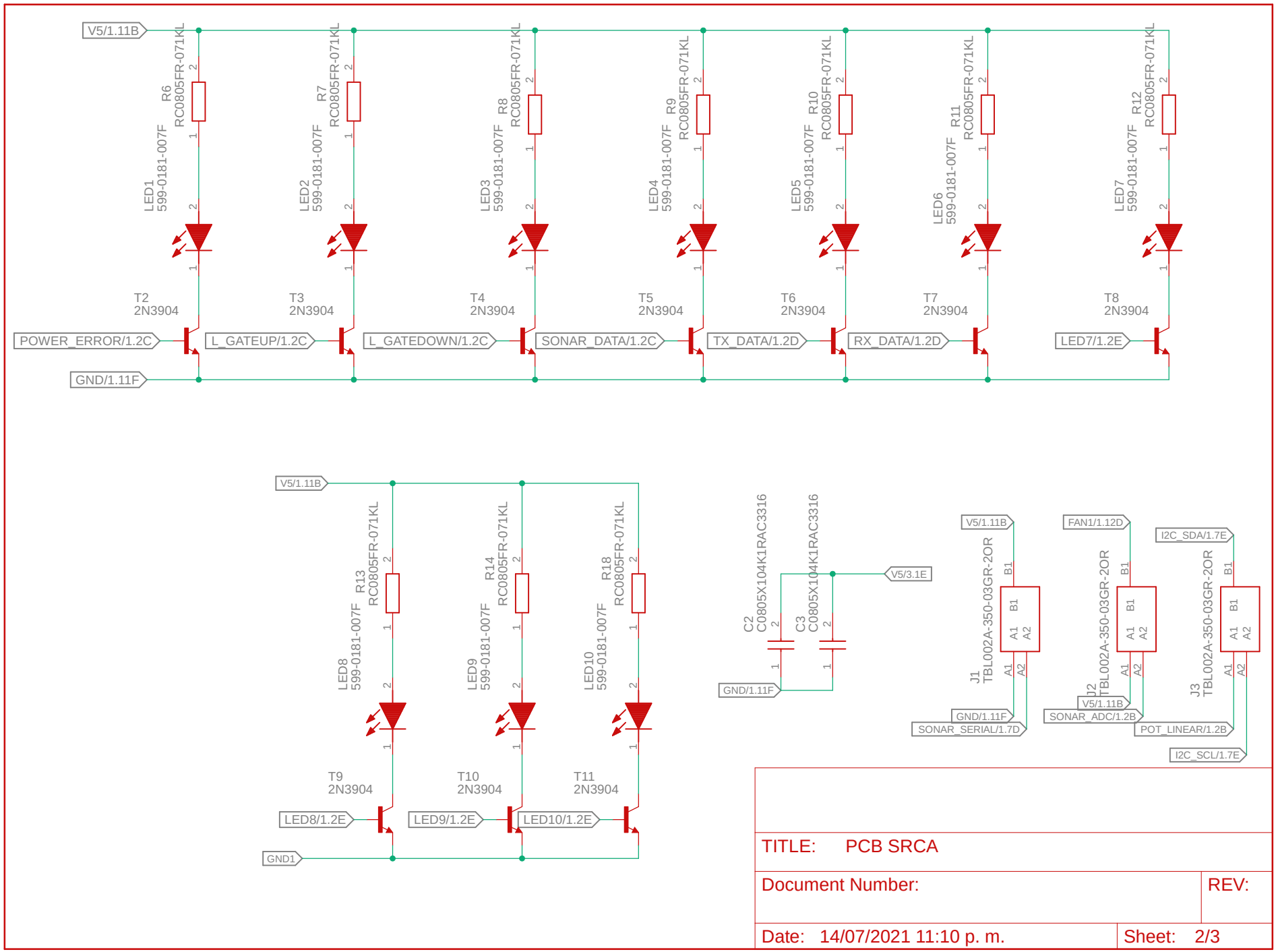
V5/1.11B
R6 RC0805FR-071KL
LED1 599-0181-007F
T2 2N3904
POWER_ERROR/1.2C
GND/1.11F
R7 RC0805FR-071KL
LED2 599-0181-007F
T3 2N3904
L_GATEUP/1.2C
R8 RC0805FR-071KL
LED3 599-0181-007F
T4 2N3904
L_GATEDOWN/1.2C
R9 RC0805FR-071KL
LED4 599-0181-007F
T5 2N3904
SONAR_DATA/1.2C
R10 RC0805FR-071KL
LED5 599-0181-007F
T6 2N3904
TX_DATA/1.2D
R11 RC0805FR-071KL
LED6 599-0181-007F
T7 2N3904
RX_DATA/1.2D
R12 RC0805FR-071KL
LED7 599-0181-007F
T8 2N3904
LED7/1.2E
R13 RC0805FR-071KL
LED8 599-0181-007F
T9 2N3904
LED8/1.2E
R14 RC0805FR-071KL
LED9 599-0181-007F
T10 2N3904
LED9/1.2E
R18 RC0805FR-071KL
LED10 599-0181-007F
T11 2N3904
LED10/1.2E
GND1
C2 C0805X104K1RAC3316
C3 C0805X104K1RAC3316
V5/3.1E
J1 TBL002A-350-03GR-2OR
SONAR_SERIAL/1.7D
FAN1/1.12D
J2 TBL002A-350-03GR-2OR
SONAR_ADC/1.2B
I2C_SDA/1.7E
J3 TBL002A-350-03GR-2OR
POT_LINEAR/1.2B
I2C_SCL/1.7E
TITLE: PCB SRCA
Document Number:
REV:
Date: 14/07/2021 11:10 p. m.
Sheet: 2/3

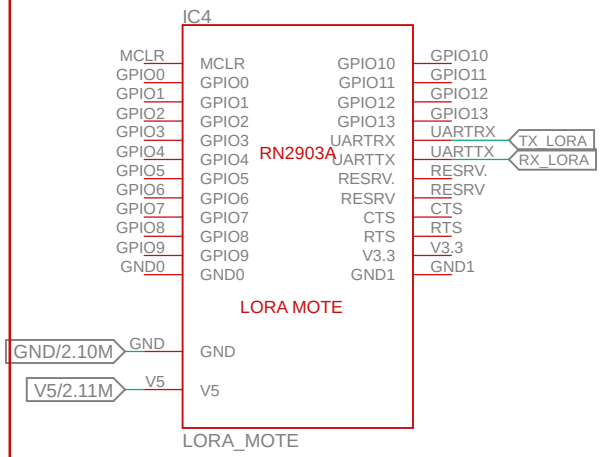

TITLE: PCB SRCA		
Document Number:		REV:
Date: 14/07/2021 11:10 p. m.	Sheet: 3/3	