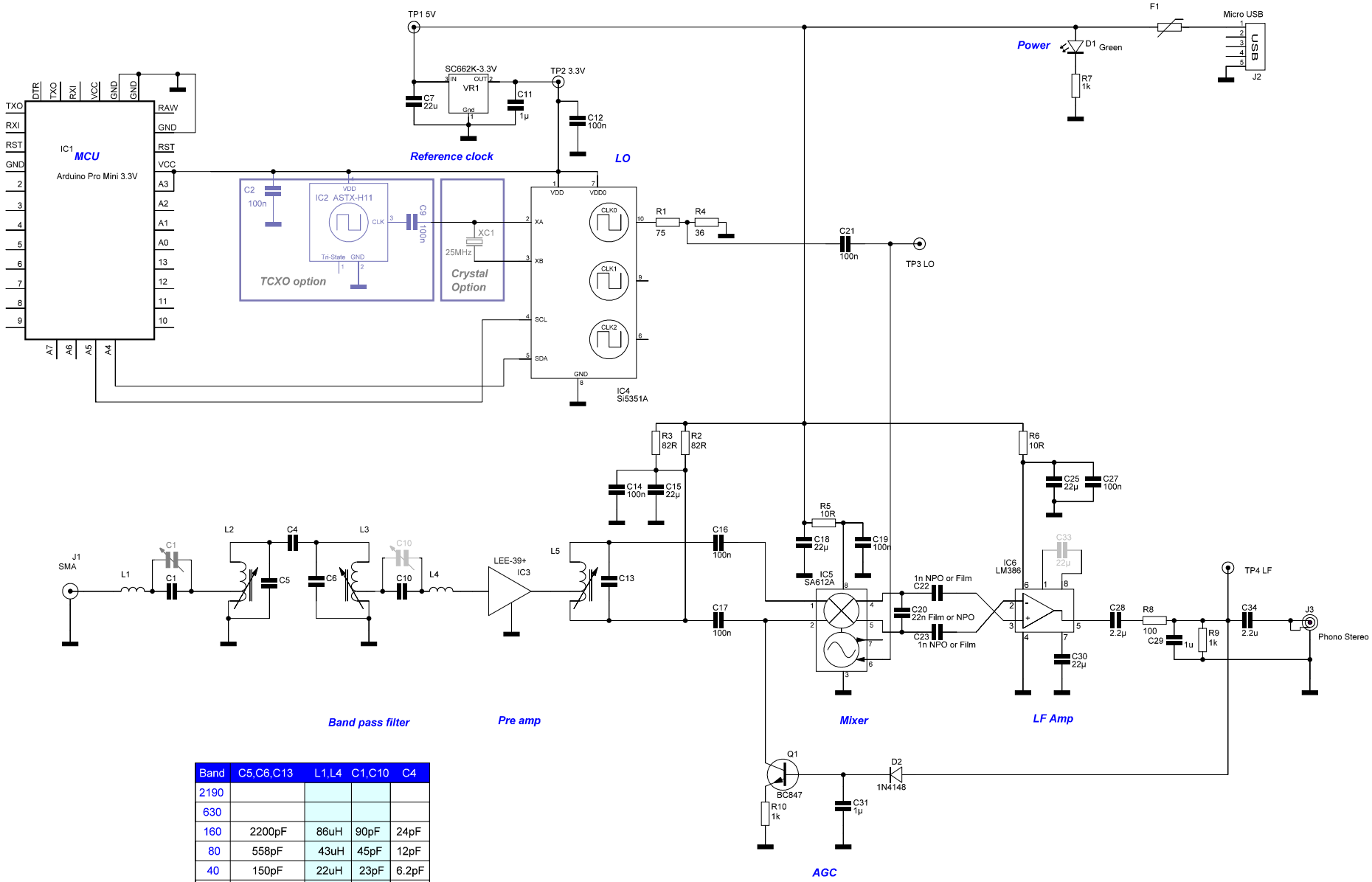

Band	C5,C6,C13	L1,L4	C1,C10	C4
2190				
630				
160	2200pF	86uH	90pF	24pF
80	558pF	43uH	45pF	12pF
40	150pF	22uH	23pF	6.2pF
30	70pF	16uH	17pF	4.3pF
20	36pF	12uH	11pF	3.1pF
17	22pF	8.6uH	9pF	2.4pF
15	16pF	7.4uH	7.7pF	2.1pF
12				
10				
6				
4				
2				

Prod Version	Revision	Revision date
3	5	2020-08-16
Prod Name		
WSPR RX		