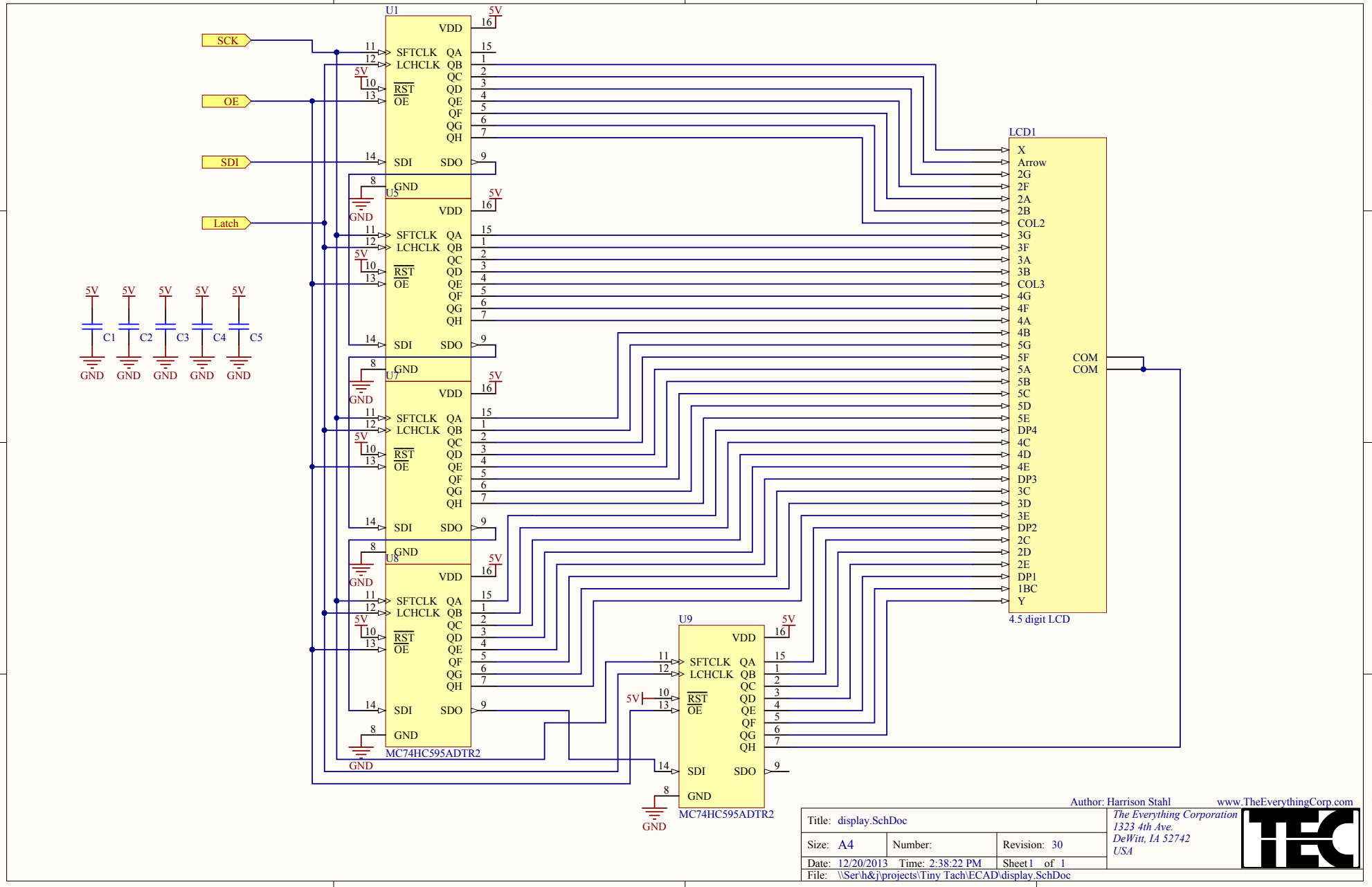
SCK
OE
SDI
Latch
U1
U5
U7
U8
U9
VDD
SFTCLK
LCHCLK
RST
OE
SDI
SDO
GND
QA
QB
QC
QD
QE
QF
QG
QH
MC74HC595ADTR2
5V
C1
C2
C3
C4
C5
LCD1
X
Arrow
2G
2F
2A
2B
COL2
3G
3F
3A
3B
COL3
4G
4F
4A
4B
5G
5F
5A
5B
5C
5D
5E
DP4
4C
4D
4E
DP3
3C
3D
3E
DP2
2C
2D
2E
DP1
1BC
Y
COM
COM
4.5 digit LCD
Author: Harrison Stahl
www.TheEverythingCorp.com
Title: display.SchDoc
Size: A4
Number:
Revision: 30
Date: 12/20/2013
Time: 2:38:22 PM
Sheet 1 of 1
File: \\Ser\h&j\projects\Tiny Tach\ECAD\display.SchDoc
The Everything Corporation
1323 4th Ave.
DeWitt, IA 52742
USA