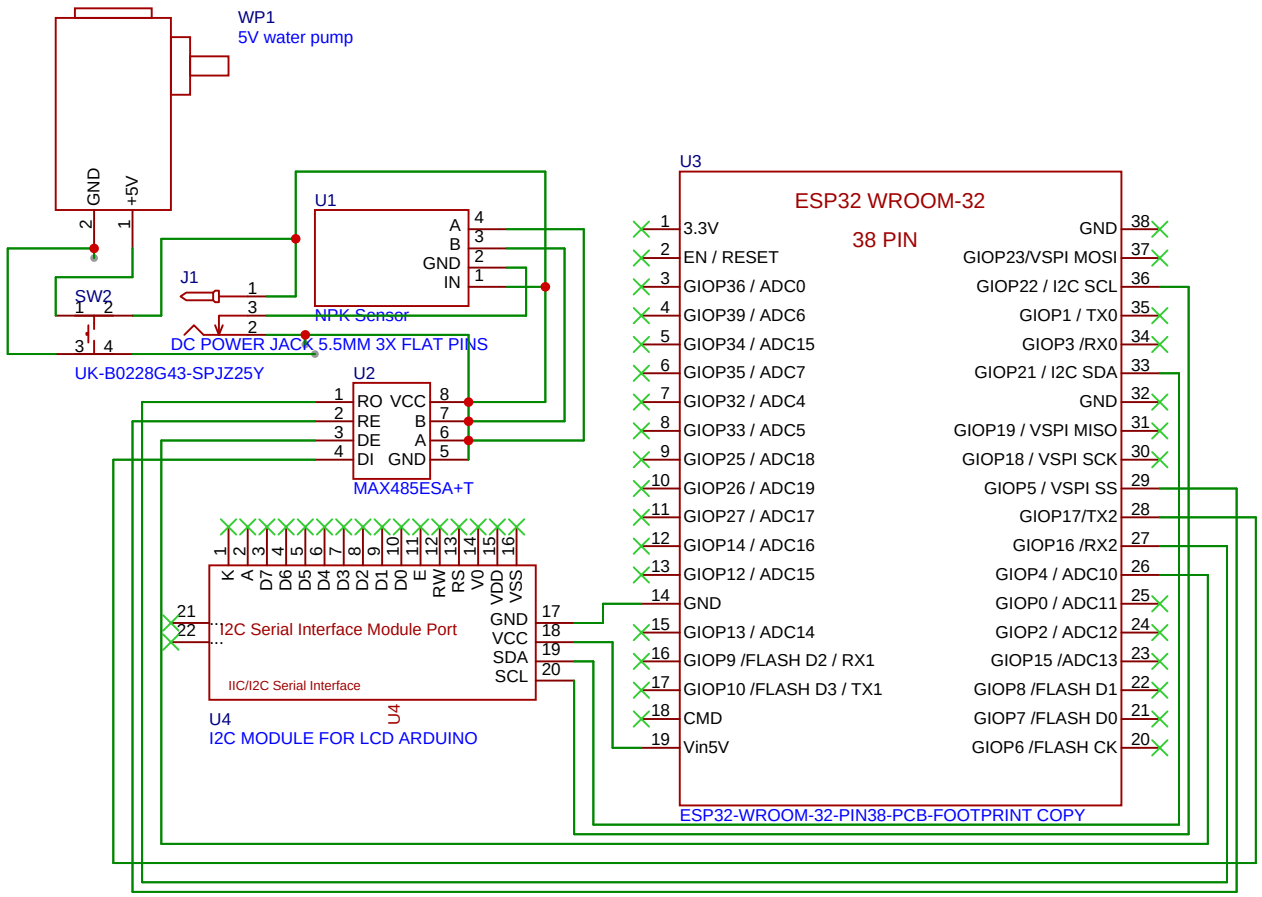

Schematic	Schematic1_1	Update Date	2024-12-11
		Create Date	2024-12-08
Page	P1	Part Number	JLCPCB-002
Drawn	EasyEDA	SENSOR CONNECTIONS	
Reviewed	EasyEDA		
		VER	SIZE	PAGE 1 OF 1
EasyEDA		V0.1	A4	EasyEDA.com