Architectures and Use cases of AI-based Network

Hua Zhang
China Telecom
Research Institute
Beijing, China
zhanghua111@chinatelecom.cn

Sen Xu
China Telecom
Research Institute
Beijing, China
xusen@chinatelecom.cn

Jincan Xin
China Telecom
Research Institute
Beijing, China
xinjc@chinatelecom.cn

Shangkun Xiong
China Telecom
Research Institute
Beijing, China
xiongsk@chinatelecom.cn

2021 13th International Conference on Advanced Infocomm Technology (ICAIT) | 978-1-6654-3188-0/21/$31.00 ©2021 IEEE | DOI: 10.1109/ICAIT52638.2021.9701988

***Abstract*—The development of AI in communication networks is inseparable from the support of standardization. This article introduces network AI functions and use cases based on standard research. It firstly summarizes the research of implementations, algorithms, and optimizations of AI nowdays, which clarifies the network development goal of realizing AI functions in the future. Secondly, the brief explaination of SON and detailed explication of MDA and AI networked architecture design of the core network and RAN are introduced. Then the paper highlights UE trajectory prediction and smart energy-saving use cases of the wireless network, and it mainly focuses on the comparative study of algorithms and signaling realization. Last but not the least, the intelligent network platform enriches the ideas for future development of providing more reliable networks to vertical industries.**

Keywords-component, AI; Network Architecture; MDA; AI-based usecase; AI applications

I. INTRODUCTION

The enhancement of 5G network in terms of user volume, end-to-end delay and connection density provides a very good bearing for AI-driven intelligent services. In the future, 6G is intended to provide human society with the full coverage and ability to connect virtual and reality equipments. Advanced algorithms, edge computing and AI capabilities are cornerstones for achieving 6G goals and they are important research directions of 5G.

AI-based technologies can reduce human involvement in network operations and optimize network coverage and quality. AI techonology applied to antenna enables the best antenna combination for different environment and achieves the optimal performance. A 5G software defined radio platform has been designed for measurement of AI antenna to get the passive transmission capability of multiple antennas with different pattern combinations in multi-path environment [1]. A new type of AI framework for wirless KPI monitoring and network condition diagnosis is introduced to enhance the systematic management of the network. Among the structure, the element management system (EMS) collects cell-level configuration information and network management system (NMS) is responsible for higher level entity integrated management [2]. The combination of AI and Internet of Things (IoT) can intelligently control the physical environment and bring new solutions to the operation and management of many fields, such as adopting artificial intelligence-based learning technology and image recognition technology to the crop harvesting systems, or heterogeneous network management and future wireless communication network resource management [3].

The following chapter of this paper briefly summarized the SON system firstly, then elaborate the MDA function for core network and RAN network, and AI framework of RAN in detail. The research progress and achievements for 3GPP are shown by introducing two AI based use cases, which are AI based UE trajectory prediction and energy saving of base station, the algorithm and signaling process are its main research objects.

II. AI BASED NETWORK ARCHITECTURE

The application of AI in mobile communications is becoming more and more popular and the related functional system needs to be designed differently according to its own needs. For example, the AI data collection unit on the RAN side should consider a shorter sampling time and the processing precision is not high. Therefore, AI applications need to be designed according to actual architectural requirements. SON (Self-Optimizing Network) is the concept proposed by 3GPP in LTE era, it's one of the earliest application scenarios of machine learning algorithms in the communication industry. The network architecture of SON can be described as centralized, distributed and hybrid, and its main idea is to realize autonomous functions of wireless network to reduce the manual participation and operating costs. SON will get continuous improvement in RAN, for traditional ML algorithms will be replaced by neural network algorithms and reinforcement learning algorithms, and improvement of interfaces and signaling protocols also enables SON to be integrated into the 5G network infrastructure faster. Newly defined network systems and frameworks that are proposed by various standards organizations will be introduced eachly in the following chapter.

A. Management Data Analytics (MDA)

Intelligent network management, operation and maintenance are inseparable from the technical support of AI and ML. Collecting and analyzing real-time performance data that are derived from analytic applications are indispensable

Authorized licensed use limited to: REVA UNIVERSITY. Downloaded on October 13,2025 at 10:54:53 UTC from IEEE Xplore. Restrictions apply.

for detecting potential problems in advance and take appropriate measures to alleviate any issues. MDA is proposed to provide a capability of processing and analysing the raw data related to network and service events and status, e.g., performance measurements, MDT measurenments reports, QoE reports, alarms, configuration data, network analytical data, and service experience data from AFs, etc. According to the analytics report which contains recommended actions, necessary actions and service operations will be completed by the network [4].

As illustrated in Fig.1, consumers and producers constitute the framework of MDA. MDA producer may collect data for analysis by acting as an MnS Consumer, and/or as an NWDAF subscriber, and/or as a consumer of another MDAS producer. After analysis, the MDAS Producer exposes the analysis results to MDAS consumers [5]. 3GPP proposes MDA functions for various of consumers, such as Management Function (MF) for network and service, Network Function (NF) containing Network Data Analytics Function (NWDAF) network elements defined on 5G core network side, SON NF and optimization tools for network and service, etc. MDA analyzes the original performance data and other management data of mobile network to form analysis reports for one or more NF, subnet, Network Slice Subnet Instance (NSSI) or Network Slice Instance (NSI), thereby indicating overload conditions or potential failures to provid necessary execution of network and service operations.

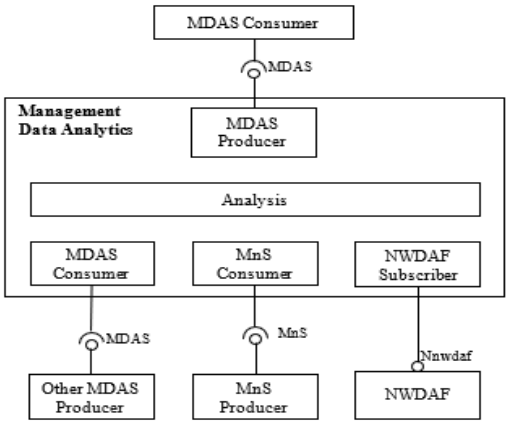

Fig. 1 Functional overview and service framework of MDA

MDA forms a closed management loop which comprised by processes of observation, analytics, decision and execution [6]. The analysis process requires MDA to classify, correlate, learn, and identify the current and historical data to obtain the inference and prediction results. Decisions are made by MDAS consumers or human operations based on the analysis reports, and each network node completes the execution operation and responsible for output the execution report. MDAS producers provide analysis data related to different types of NFs that can be used for management, and can use the NWDAF analysis results as input. MDA can collect data for MDAS consumers, MnS consumers, and NWDAF subscribers for analyzing purpose, and finally disclose the analysis results to MDAS consumers.

MDA process relies on ML technology and requires the participation of consumers to ensure the accuracy of results. The producer continues model training for collected data, which the data can also be related to validation data provided by consumers. As the trained model generates analysis report, consumers will send validation data as feedback to the MDAS producer in order to realize model optimization. The MDA-based network architecture can be used for implementing use cases such as network coverage optimization, energy saving, SLS assurance related issues, and security problems. 3GPP SA5 is currently working on MDA in OAM in Rel-17, studying how NWDAF can empower OAM or RAN with analysis functions. In addition, NWDAF will be involved in the integration with MEC, supporting more vertical industry applications through MEC.

B. Implementation of AI in RAN

3GPP RAN3 has discussed about the AI-based network function architecture and taken factors of the benefit of standardization and universality and accuracy of the architecture into considerations. The current architecture is shown in Fig. 2 below, which the block name, block structure and feedback design are still in the ongoing discussion stage.

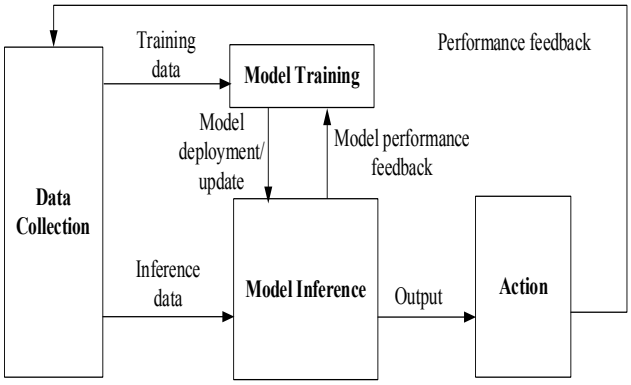

Fig. 2 AI Functional Framework

The functional framework of AI-enabled RAN is composed of data collection, ML training, ML inference and action modules. The input of data collection comes from terminals or network nodes in different application scenarios, it can also be the feedback data from execution nodes to optimize the accuracy of algorithms and improve the overall reliability of the system. The AI/ML model contains the data-driven algorithm based on a set of inputs and its corresponding output composed of predictive information. The model training represents the online or offline training process of the AI/ML model. The inference module is the process of making predictions or decisions based on data and ML model.

Model training and model inference are important modules of AI functions and different deployment positions of these modules could cause different impacts for the standard. For example, the model training supported by CN and gNB-CU will involve the data transmission of the NG interface and the F1 interface respectively [6]. The model inference module can send output data or signaling to

Authorized licensed use limited to: REVA UNIVERSITY. Downloaded on October 13,2025 at 10:54:53 UTC from IEEE Xplore. Restrictions apply.

corresponding requesting nodes. If the inference module is responsible for providing output prediction, the prediction accuracy indicator needs to be provided by the network node who has been requested and subscribed to this information. So the training data interaction between the model training module and other functional entities, as well as the data information and purpose contained in the performance feedback, are key points for the RAN AI-related issues.

How to support ML training and ML inference in wireless networks depends on the classification of machine learning algorithms for different use cases. 3GPP defines and introduces three main types of machine learning problems, which are supervised learning, unsupervised learning and reinforcement learning [7]. Usually supervised learning is used for the classification and regression of the labeled input data. The learning and training process of related algorithms involves both data and the labels, and the performance feedback of data collection should also include data labels accordingly. Reinforcement learning uses environmental feedback and rewards to continuously optimize decisions to obtain the best result [8]. In a wireless network, the environment may refer to channel conditions, interference, throughput, waiting time, etc. These measured values and rewards should be fed to the training node. For example, the goal of a use case is to optimize the end-to-end waiting time. According to the strategy provided by the reinforcement learning model, the data sent to the data collection module should include positive reward feedback and measurement data through the existing NG-RAN interface. It can be seen that the classification of machine learning algorithms will affect the data interaction between the training module and inference module of different network nodes, which leads to certain impact for the interface afterwards.

III. Typical AI-based Use Cases in RAN

The development of mobile communication networks has resulted in a rapid increase of mobile data. Therefore, user behavior analysis and mobility predictions have become important signs for network intelligence. At the same time, the growth of network capabilities has leaded to serious energy consumption of the network. In order to respond to the call for a green network, the energy-saving of base stations based on AI identification and management is an important research field for future networks. The realization of various AI scenarios of wireless network need to be studied case by case.

A. UE Trajectory Predition

User trajectory prediction has became an important basis for use cases such as network resource allocation, mobility management, selection of handover targets, and RNA configuration under RRC activation. It has very broad prospects in current application fields, which can be used to predict the users' location from different time granularities. In addition, trajectory prediction is an effective method to solve the problems of delay and throughput reduction caused by frequent handovers of UEs in the network, and effectively avoid short stay, ping-pong handover, early handover, late handover, etc. [10].

The most frequently used mobility prediction methods include frequent patterns mining, Markov-based models and other machine learning methods, all of which belong to multi-classification problems and are mostly used for the prediction of discrete locations. For a trajectory composed of continuous position indexes, the higher the discretization granularity, the better the user's movement trajectory can be displayed [11]. In order to solve the prediction problem of time series regression, traditional regression algorithms such as linear regression and Support Vector Regression (SVR), as well as the Autoregressive Integrated Moving Average model (ARIMA) are all feasible solutions. Trajectory prediction is different from the multi-quantity data processing problem under the long-term sequence, it is usually a short sequence problem composed of two-dimensional vectors that reflects geographic location information. Research has shown that the introduction of Recurrent Neural Network (RNN) algorithms including Long Term Short Term Memory (LSTM) can better solve such problems.

Considering the requirement of real-time handover decision-making, model training and model inference can be deployed in OAM and RAN respectivly. Or both modules can be located on the side of the base station node [12]. For the latter deployment scheme, the AI function of each node in the network is first initiated by the OAM and then synchronized between network nodes. The training data of the model is obtained by configuring the MDT measurement from base station to UEs. The base station performs model training for trajectory prediction, and via the AI model management function of the interface, the synchronization of training models between different base stations can be realized. At the same time, data continuously reported from UEs to gNB as the reference data to meet requirements for real-time trajectory prediction. Model inference is responsible for outputting information including UE location prediction and target cell prediction as references for performing operations, and performing operations are implemented by base stations. The impact of this use case for standards lies in the enhancement of interface and MDT signaling based on AI functions

B. Energy Saving (ES) scenario of Base Station

According to the study, two categories of energy-saving scenarios are defined according to the modeling method, one is based on simple linear models or expert experience, which relies on manual experience to judge and operate. The other one is based on machine learning algorithms, such as gradient boosting regression trees, neural networks, etc. [13].

Distributed AI applications of the network are development trend in the future, we take the AI energy-saving use case of split architecture base station as an example to study in detail. As the F1 interface is used for signaling interaction and data transmission between CU and DU, the realization for AI based data transmission of F1 interface should be considered. Firstly, the CU only knows the transmission rate of the PDCP layer and cannot obtain the physical layer granularity information from DU, for instance the information of PRB and channel conditions. That is to say,

Authorized licensed use limited to: REVA UNIVERSITY. Downloaded on October 13,2025 at 10:54:53 UTC from IEEE Xplore. Restrictions apply.

the PRB occupancy status and corresponding wireless channel conditions of one or a group of users in the DU-side serving cell are unknown to CU. Secondly, there is no interface for AI data transmission and the data interaction between DUs are not supported in this stage, which is not conducive to the development of distributed AI applications of federated learning algorithm based. Based on above analysis, 3GPP NR protocol needs to be enhanced in a new way to meet the needs of AI based network deployment and optimization, and the specific signaling process is shown in following figure.

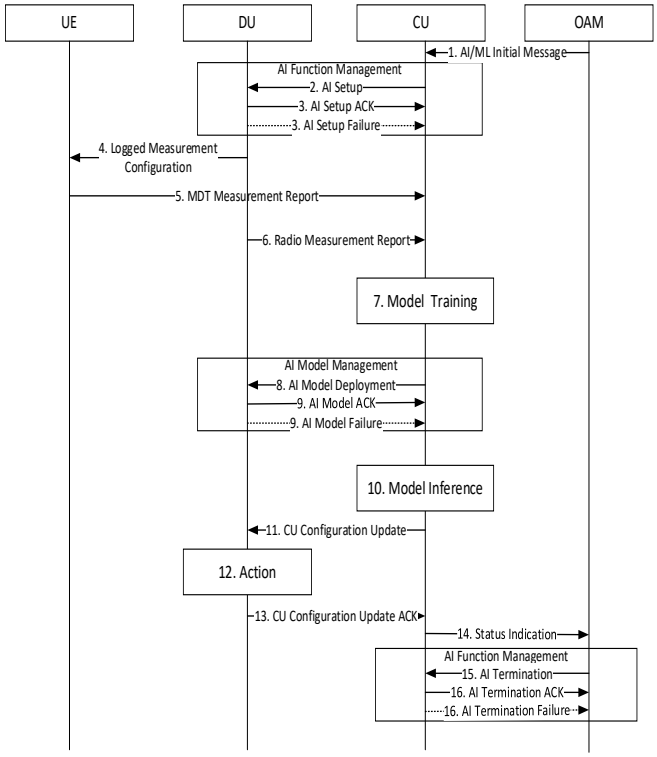

Fig. 3 Potential solutions for base station energy-saving

OAM initiates AI/ML activation signaling to CU, which calls a list of related models based on energy saving of base stations. CU then initiates the synchronization of AI function to DU and this can be completed successfully if their supporting algorithms and models match. Then CU sends MDT measurement configuration to UE via DU, instructing the UE to report related measurement information, such as RSRP and RSRQ of the serving cell and neighboring cells, SINR measurement value, and UE location information. UE reports the measurements to CU as model feature inputs, and CU analyzes and evaluates offline or online model algorithms by model training procedure. The base station CU sends a model deployment message to DU to indicate the application of the model and waits for the confirmation of the successful connection. The model inference is deployed on CU for making predictions and energy saving decisions to form an analysis report. CU sends analysis report to DU via F1 interface and the CU Configuration Update message includes information of recommended cell IDs for implementing energy-saving operations and new target cell IDs for carrying traffic offloading. According to the analysis report, recommended actions or configurations are executed and at the same time the DU saves corresponding configuration information. Then DU feedbacks Configuration Update ACK to CU. The last step is to allow CU informs OAM the power saving effect of base stations through Status Indication message and thus OAM and CU can decide together whether to terminate the AI function according to the network power saving effect and pre-configuration information.

IV. AI PLATFORM APPLICATION

Development has provided efficient slicing services for vertical industries. Operators, various manufacturers in the industry, and advanced research institutions have planned and implemented various artificial intelligence research and development platforms for telecom industry scenarios. The wireless network intelligence platform is a general research and development platform integrating AI model algorithms, computing clusters and other software and hardware.

The intelligent platform system architecture mainly includes three layers, the first layer is for application scenarios, services or products. The application layer mainly involves wireless parameter and strategy optimization, including near real-time optimization applications and non-real-time optimization applications. Near real-time use cases such as beam tracking and resource scheduling optimization require control and optimization with a time granularity of seconds or milliseconds; non-real-time optimization applications refer to cell-level or slice-level application scenarios, which are relatively time-sensitive.

The second layer processes the collected data and algorithms, and provides basic data services for the realization of platform services. The collected data includes data provided by the operator and some external data. According to different scenarios and deployment requirements, the data can be classified into real-time data and non-real-time data after processing, and stored in the data warehouse on demand, and used for data feature extraction. Form a characteristic data set, such as base station information, network performance index information, or user information. AI-related functions are also reflected in this layer, including AI model training, AI model warehouse and AI model reference. AI model training is based on a set of input data-driven algorithm training, model training and inference are carried out by learning the characteristics and patterns of the data, and a set of output composed of predictive information is generated. The AI model warehouse aims to provide a variety of public AI models required by wireless intelligent applications, so that subsequent businesses can quickly call appropriate algorithms and optimize related parameters. AI model reference refers to the process of using a trained model and combining the collected data to make predictions or guide decision-making. System-level evaluation and verification are also important functions of platform-level design, responsible for generating comprehensive optimization strategies.

The third layer is mainly responsible for the control and optimization of the corresponding granularities of different

Authorized licensed use limited to: REVA UNIVERSITY. Downloaded on October 13,2025 at 10:54:53 UTC from IEEE Xplore. Restrictions apply.

businesses, through the stored data feature extraction results, reasonably selected AI models and parameters, and collected data. The optimized parameters are issued through the strategy and act on the wireless network. At the same time, the obtained strategy can also be fed back to the AI model pool to optimize and update the weight and structure of the corresponding AI model. At this point, the entire control network has formed a closed loop from policy distribution to data collection and data analysis, to model update, and finally to the policy update, which can ensure the efficient operation of the entire network.

V. Conclusion

The development of AI in communication networks is inseparable from the support of standardization. Study for networked AI of different communication standards will be carried on, and it will continue focus on the mechanisms from perspectives of algorithms, models, interfaces, parameters, etc. The combination of AI and wireless network not only provides new impetus for the development of communication industry, but also faces many problems and challenges need to be explored.

References

[1] L. Wang, F. Hsiao, Y. Zhang and T. Chiu, "AI-based antenna technology for 5G software-defined radio platform," 2018 International Symposium on Antennas and Propagation (ISAP), 2018, pp. 1-2.

[2] Y. Cho, Y. Kim, S. Kim, D. Sim, D. Kwak and J. Lee, "AI-Enabled Wireless KPI Monitoring and DiagnosisSystem for 5G Cellular Networks," 2019 International Conference on Information and Communication Technology Convergence (ICTC), 2019, pp. 899-901, doi: 10.1109/ICTC46691.2019.8939988

[3] G.-J. Horng, M.-X. Liu, and C.-C. Chen, “The smart image recognition mechanism for crop harvesting system in intelligent agriculture,” IEEE Sensors Journal, vol. 20, no. 5, pp. 2766–2781, 2020.

[4] 3GPP TS 28.550, Performance assurance (Release 16) [S], December, 2020

[5] 3GPP TR 28.809, Study on enhancement of Management Data Analytics (MDA) (Release 17) [S], March, 2021

[6] OUYANG Y, WANG L L, YANG A D, et al. Next decade of telecommunications artificial intelligence[J]. Telecommunications Science, 2021, 37(3): 1-36.

[7] 3GPP,” Study on enhancement for Data Collection for NR and EN-DC,” Tech. Rep. 3GPP TR 37.817 v0.1.0, Jan. 2021

[8] R3-212300. High Level Principles and Definitions of AI/ML enabled NG-RAN [C]//3GPP TSGRAN. WG3 Meeting #112-e. 3GPP, electric meeting, 2021.

[9] R3-212028. AI based UE Trajectory Prediction [C]//3GPP TSGRAN. WG3 Meeting #112-e. 3GPP, electric meeting, 2021.

[10] Chunjie Wang, Lin Ma, et al. Exploring Trajectory Prediction through Machine Learning Methods[J]. DOI 10.1109/ACCESS.2019.2929430, IEEE Access

[11] R3-212029. Solution to AI based UE Trajectory prediction [C]//3GPP TSGRAN. WG3 Meeting #112-e. 3GPP, electric meeting, 2021.

[12] Jiahuan Zheng, Yong Xiang. Energy-saving method for 5G base station based on personalized scenarios[J]. Mobile communication, 2021, 45(3): 91-96.

[13] R3-211669. Machine Learning Use Case for BS Power Saving [C]//3GPP TSGRAN. WG3 Meeting #112-e. 3GPP, electric meeting, 2021.

Authorized licensed use limited to: REVA UNIVERSITY. Downloaded on October 13,2025 at 10:54:53 UTC from IEEE Xplore. Restrictions apply.