PDEU PANDIT DEENRAYAL ENERGY UNIVERSITY

Formerly Pandit Deenrayal Petrologen University (PDPU)

KAIZEN

Airavat 1.0

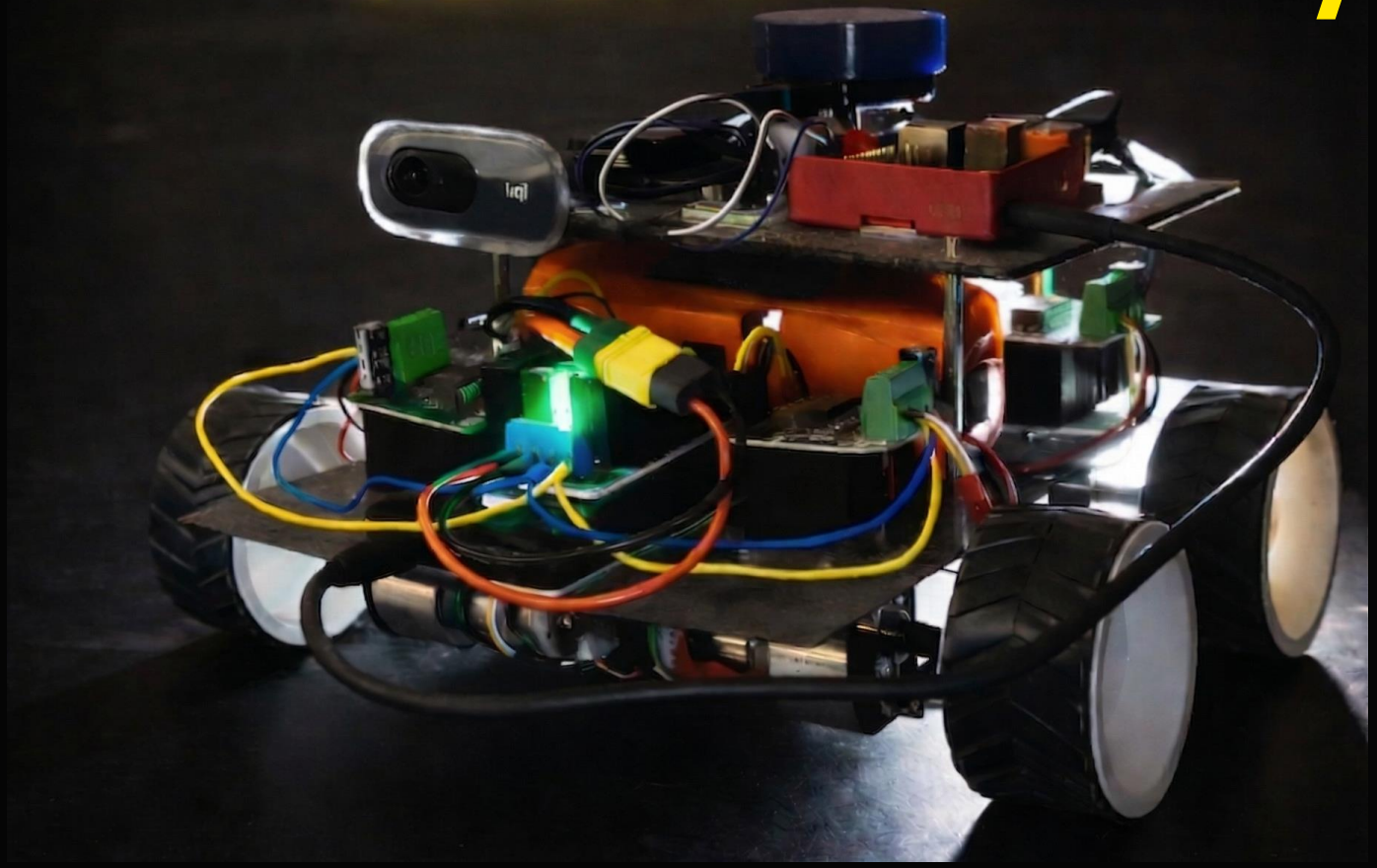

Team Kaizen

Harshvardhan Shah

Rishit Salasiya

Airavat 1.0

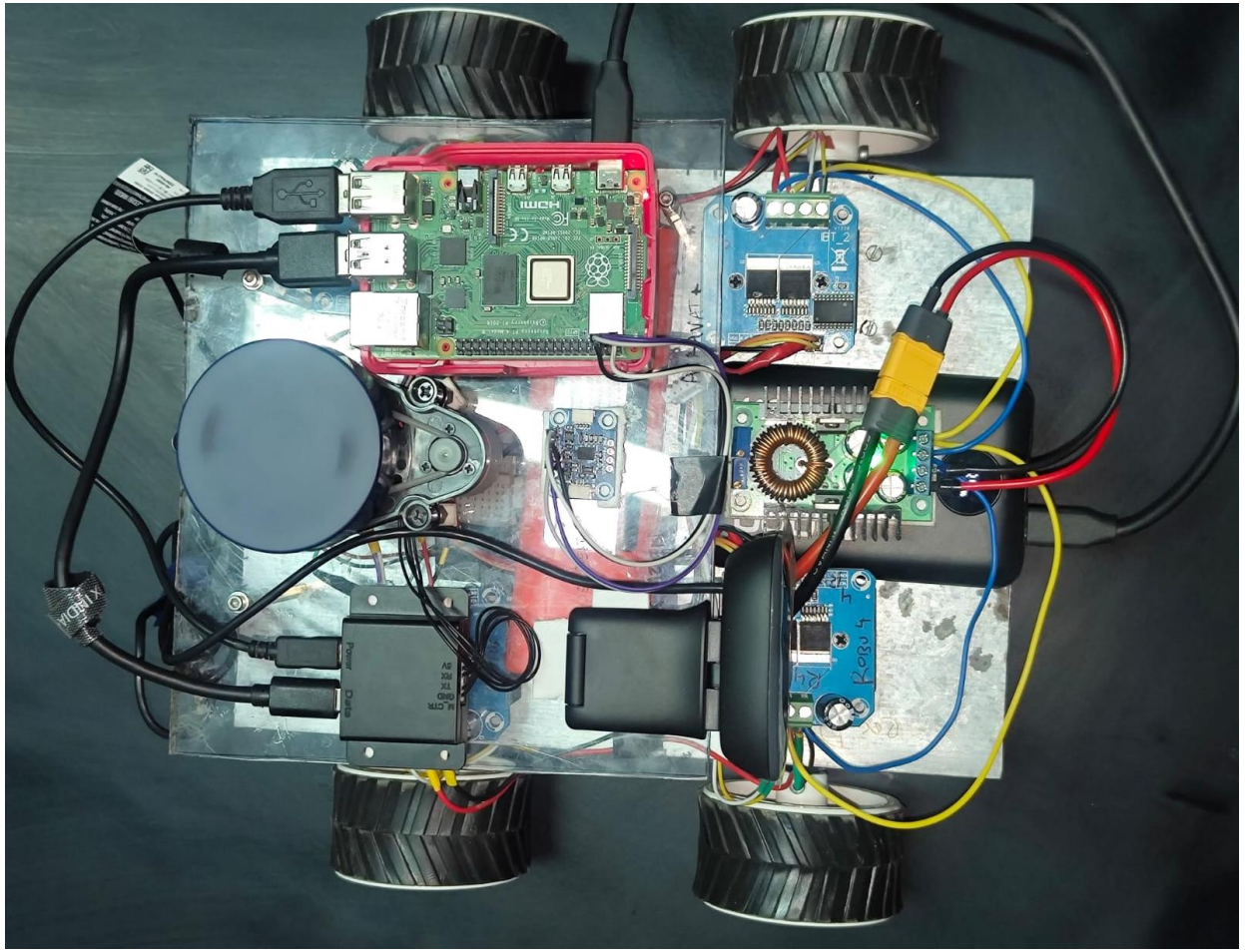

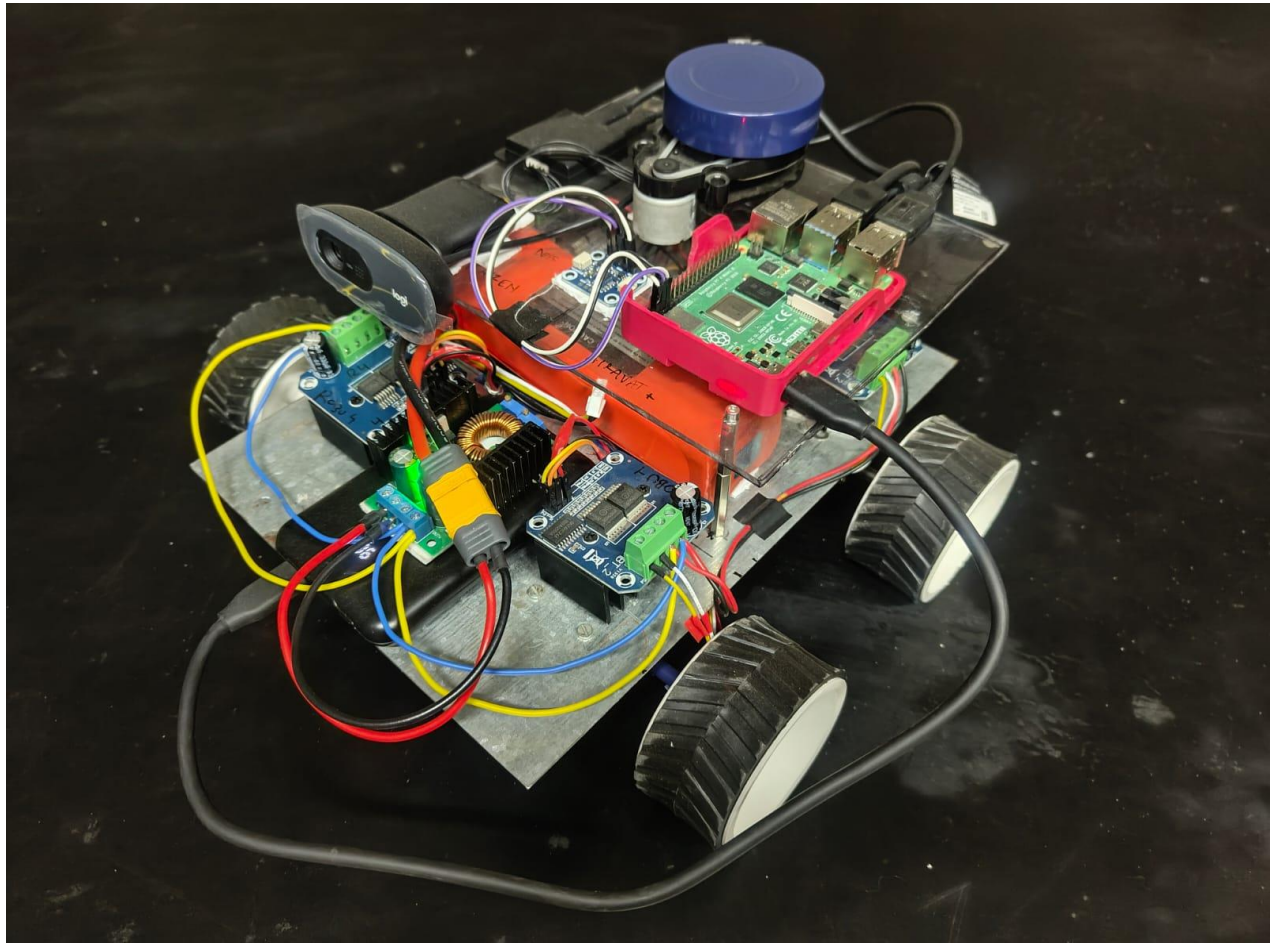

Mechanical

•The dual-layer chassis was intentionally adopted for the Proof of Concept phase to enable rapid system integration and validation of electronics and autonomy. Mechanical optimization was not the primary objective at this stage.
•Compact placement of all critical components was a functional requirement to reduce wiring complexity, signal latency, and electromagnetic interference. This configuration also enabled faster debugging and iteration during PoC testing.
•The two-layer architecture provided clear separation between high-power and low-power subsystems. This improved electrical safety, thermal clarity, and serviceability during development.

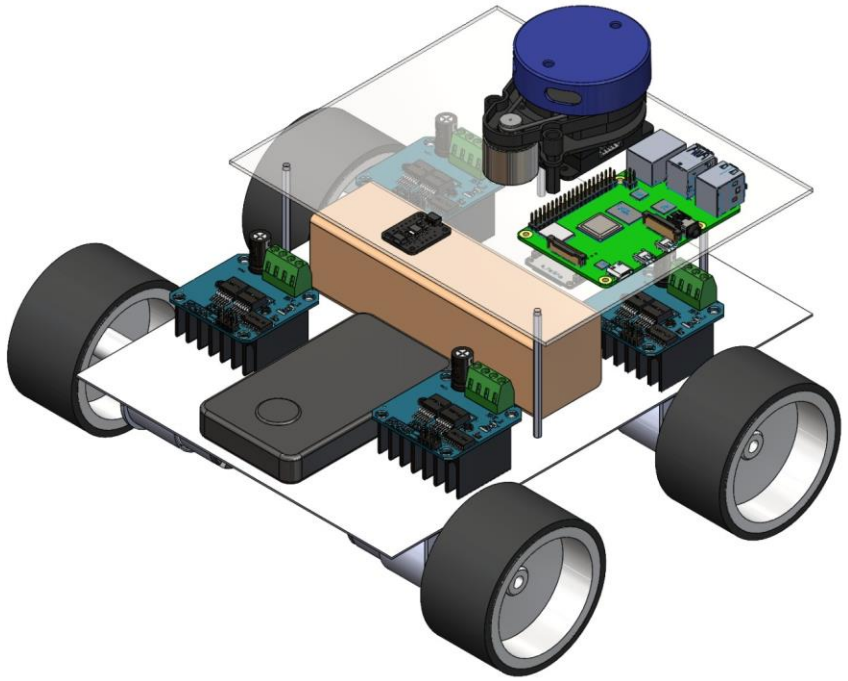

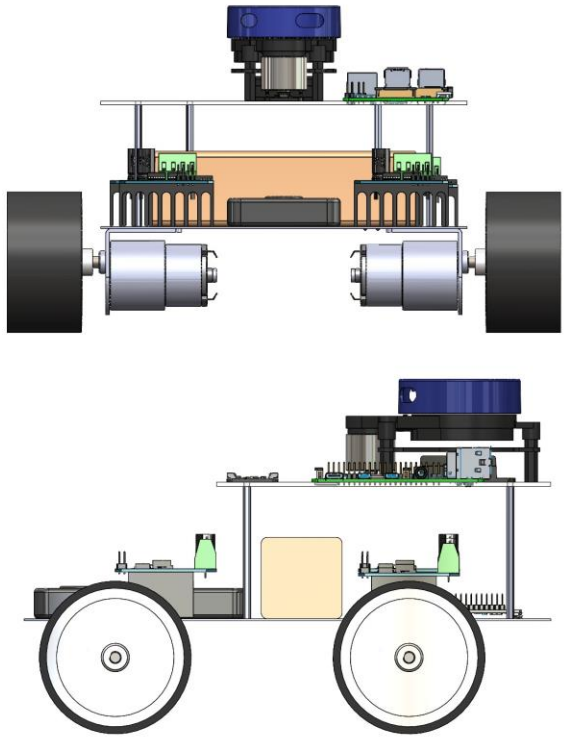

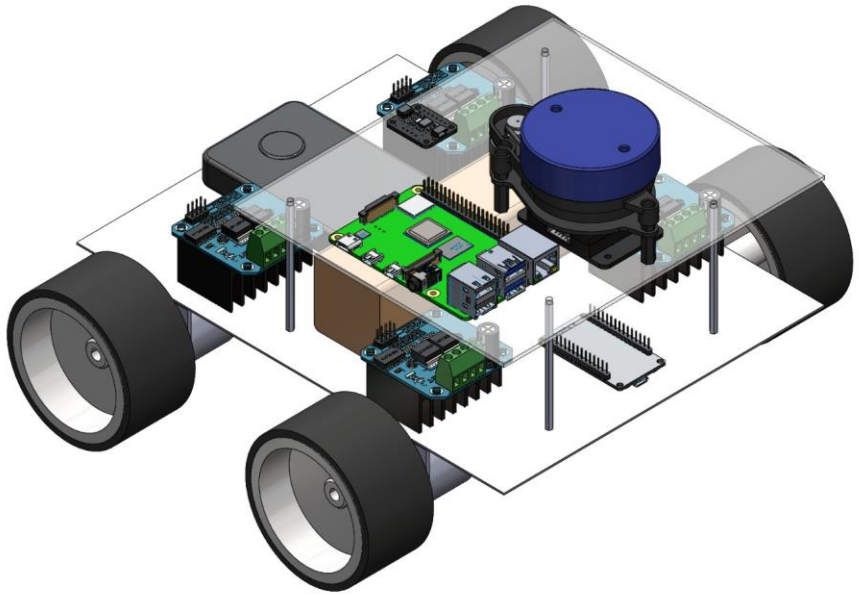

Motor Calculations

MOTOR CALCULATIONS (Using Worst Case Analysis)		
Considering a flat plane with all 4 wheels in contact with the terrain		
Speed (m/s)	RPM (min-1)	Torque (N cm)
0.25	68.24385805	0.2916666667
0.5	136.4877161	0.5833333333
0.75	204.7315742	0.875
1	272.9754322	1.166666667
2	545.9508644	2.333333333
3	818.9262966	3.5
5	1364.877161	5.833333333
10	2729.754322	11.66666667

Max Speed (m/s)	Average Acc. (m/s2)	Force due to acceleration
0.25	0.1666666667	0.3333333333
0.5	0.3333333333	0.6666666667
0.75	0.5	1
1	0.6666666667	1.333333333
2	1.333333333	2.666666667
3	2	4
5	3.333333333	6.666666667
10	6.666666667	13.33333333

Considering an incline of 30° with all 4 wheels in contact with the terrain		
Speed (cm/s)	RPM (min-1)	Torque (N cm)
0.25	68.24385805	5.436666667
0.5	136.4877161	5.728333333
0.75	204.7315742	6.02
1	272.9754322	6.311666667
2	545.9508644	7.478333333
3	818.9262966	8.645
5	1364.877161	10.97833333
10	2729.754322	16.81166667

Common Properties	
Mass (kg)	2
Wheel Radius (cm)	3.5
Wheel Radius (m)	0.035
Sin 30 degrees	0.5
Gravitational Force (N)	11.76
Gradient Force 0 deg (N)	0
Gradient Force 30 deg (N)	5.88
Time to attain max. speed (s)	1.5

Specifications	Voltage	Current	Input Power	Torque	Speed	Output Power	Efficiency	Time
	V	A	W	N. m	rpm	W	%	S
No Load	12. 21	0. 339	4. 134	0. 008	202. 6	0. 169	4. 1	0. 000
Max Efficiency Point	12. 17	1. 861	22. 66	0. 561	166. 1	9. 756	43. 1	49. 19
Max Output Power Point	12. 13	2. 722	33. 02	0. 880	144. 5	13. 31	40. 3	67. 25
Maximum Torque Point	12. 13	2. 722	33. 02	0. 880	144. 5	13. 31	40. 3	67. 25
End Point	12. 13	2. 722	33. 02	0. 880	144. 5	13. 31	40. 3	67. 25

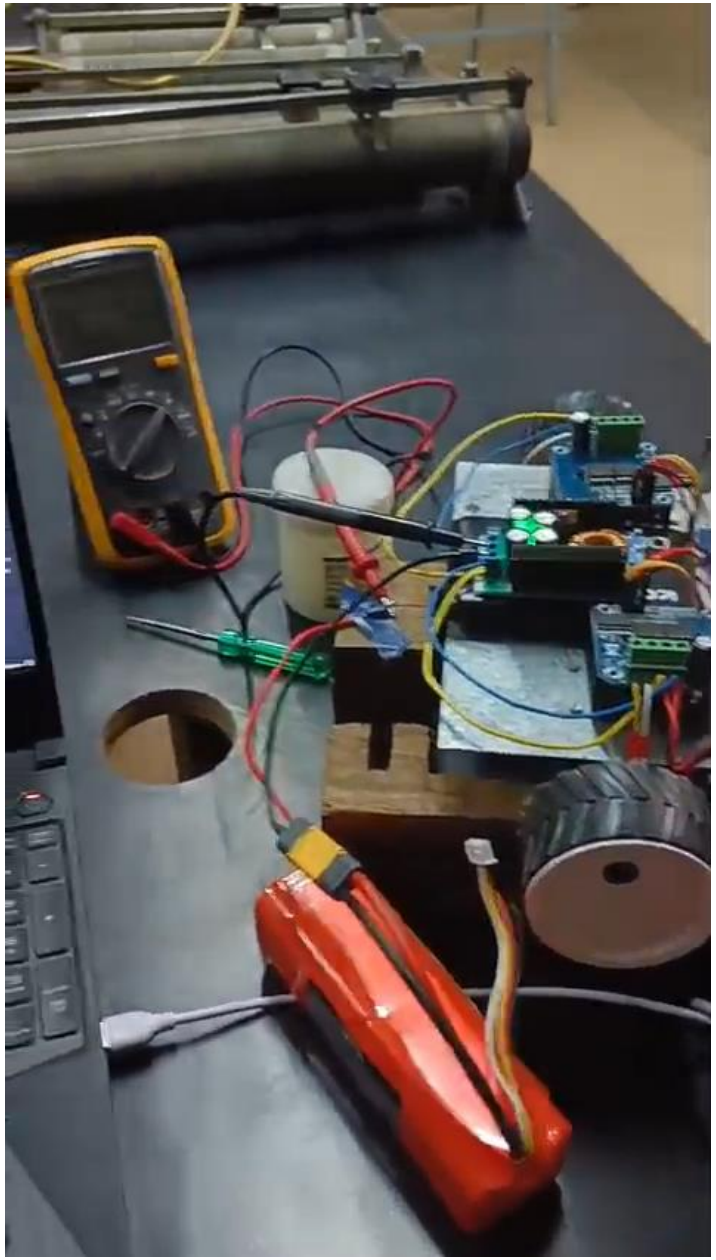

[Video]

Electrical Power System

- **Electrical Power & Control Architecture**
- A **14.8 V battery** serves as the primary power source.
- A **buck converter** regulates the battery voltage to a stable **12 V supply**.
- The 12 V rail powers all **motor drivers (BTS7960)** and high-power components.
- **ESP32** handles low-level motor control and encoder feedback.
- **Raspberry Pi 4B** manages sensing, computation, and autonomy logic.
- Sensors (LiDAR, IMU) interface directly with the Raspberry Pi.
- Encoder feedback closes the control loop for accurate motor actuation.

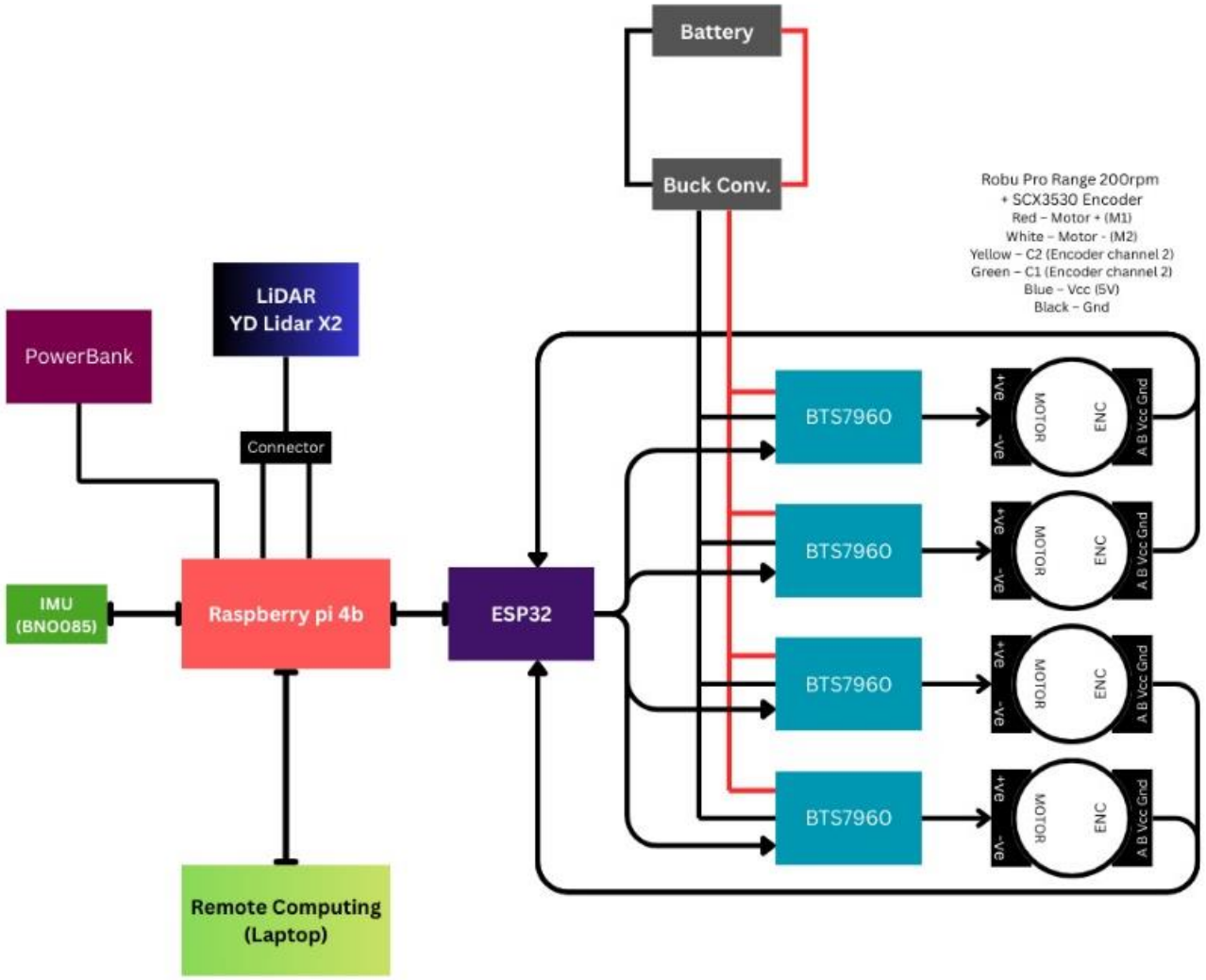

Power Budget & Energy Analysis

Module Name	Components	Qty.	Volatage(V) [Per Piece]	Cuurent @ full operation(A) [PP]	Power (W) @Full operation [Per Piece]	Wh consumed [pp](@2hrs Runtime)	Total Wh consumed by the module (@2hrs Runtime)	Total Current Draw by Module
LiDAR	YD LiDAR X2	1	5	0.38	1.9	3.8	3.8	0.38
Camera	logitech c270	1	5	0.2	1	2	2	0.2
Motors	ProRanged 200rpm	4	12	0.8	9.6	19.2	76.8	3.2
IMU	BNO055/085	1	3.3	0.0037	0.01221	0.02442	0.02442	0.0037
Total							82.62442	3.7837

- Power consumption is estimated for each subsystem at full operation
- Voltage and current ratings are used to calculate power per component
- Energy consumption is projected for a **2-hour continuous runtime**
- Drive motors account for the majority of total power usage
- Overall system consumption is approximately **82.6 Wh**, validating battery selection for PoC testing

Flow of data for Slam_toolbox based Mapping

Explanation

- LiDAR scans capture surrounding obstacles and walls.
- Wheel odometry estimates relative movement of the robot.
- IMU improves orientation and reduces drift.
- These inputs are fused to simultaneously localize the robot and create a 2D map.
- The generated map is stored and reused for navigation.

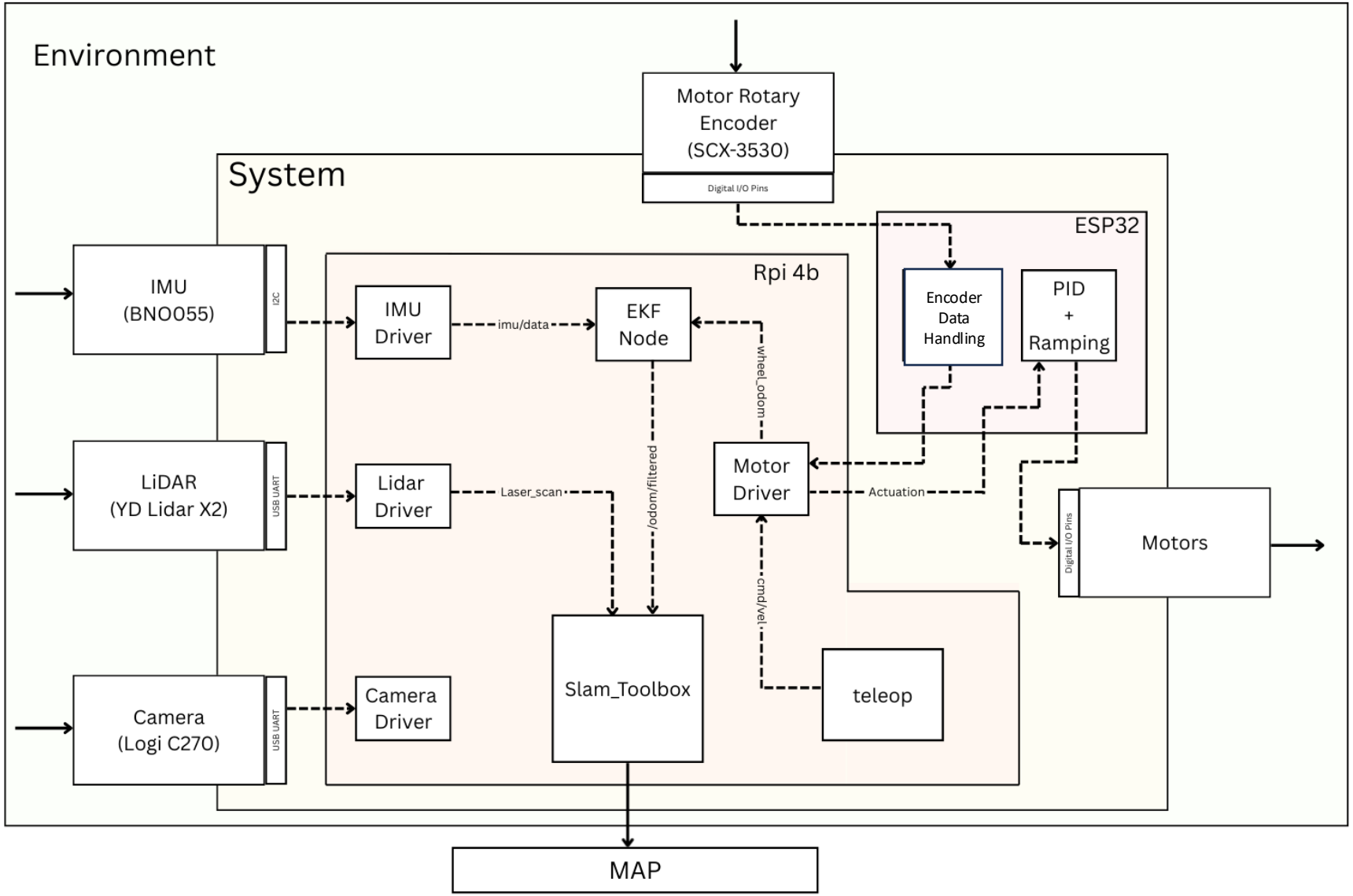

Flow of data for Nav2 based Navigation

Explanation

- Sensors capture environment and motion
- Sensor fusion estimates robot pose
- Map used for localization and planning
- Global planner computes optimal path
- Local planner avoids obstacles in real time
- Velocity commands drive motors
- Feedback corrects motion continuously

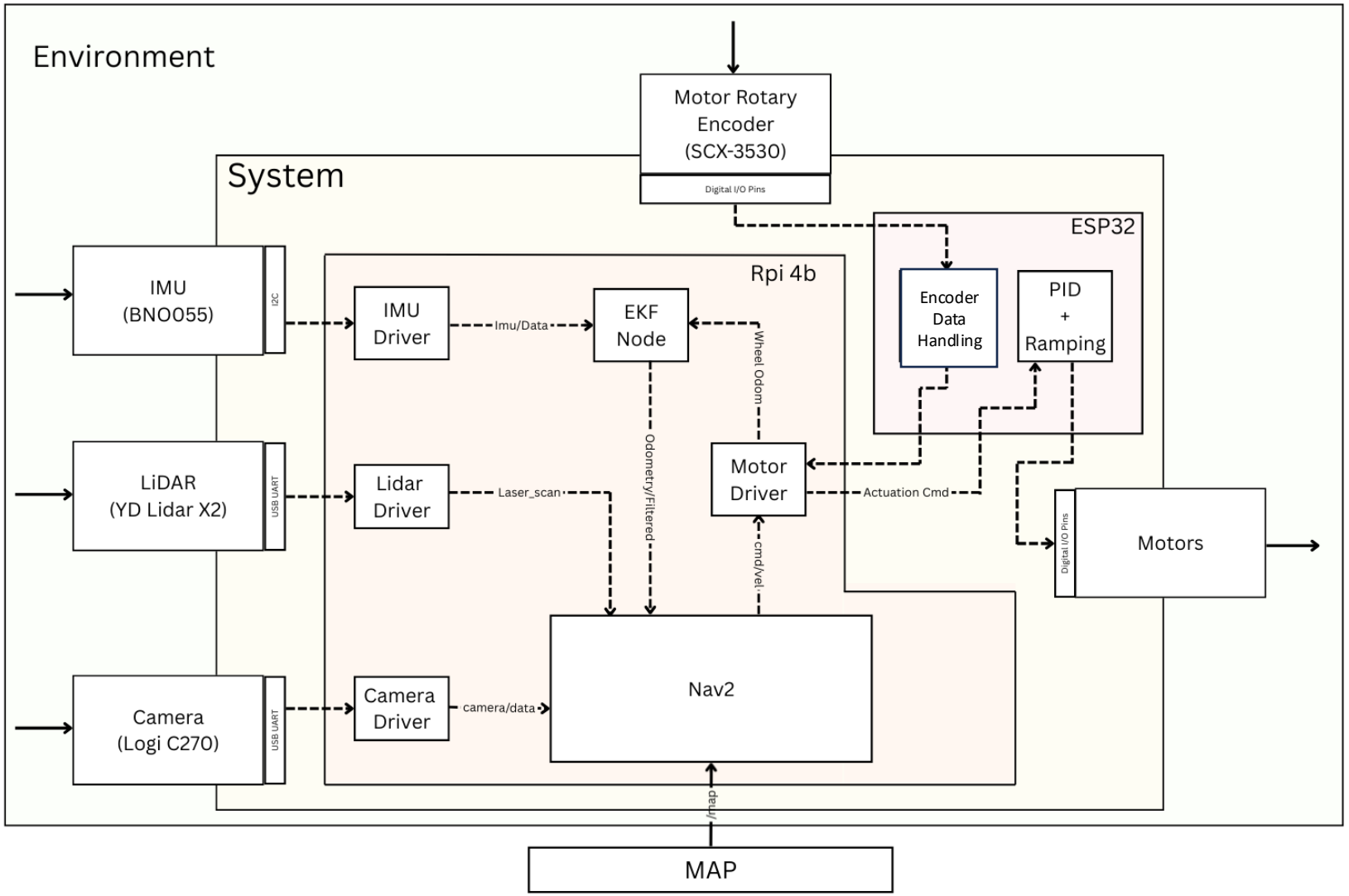

Major ROS2 Topics

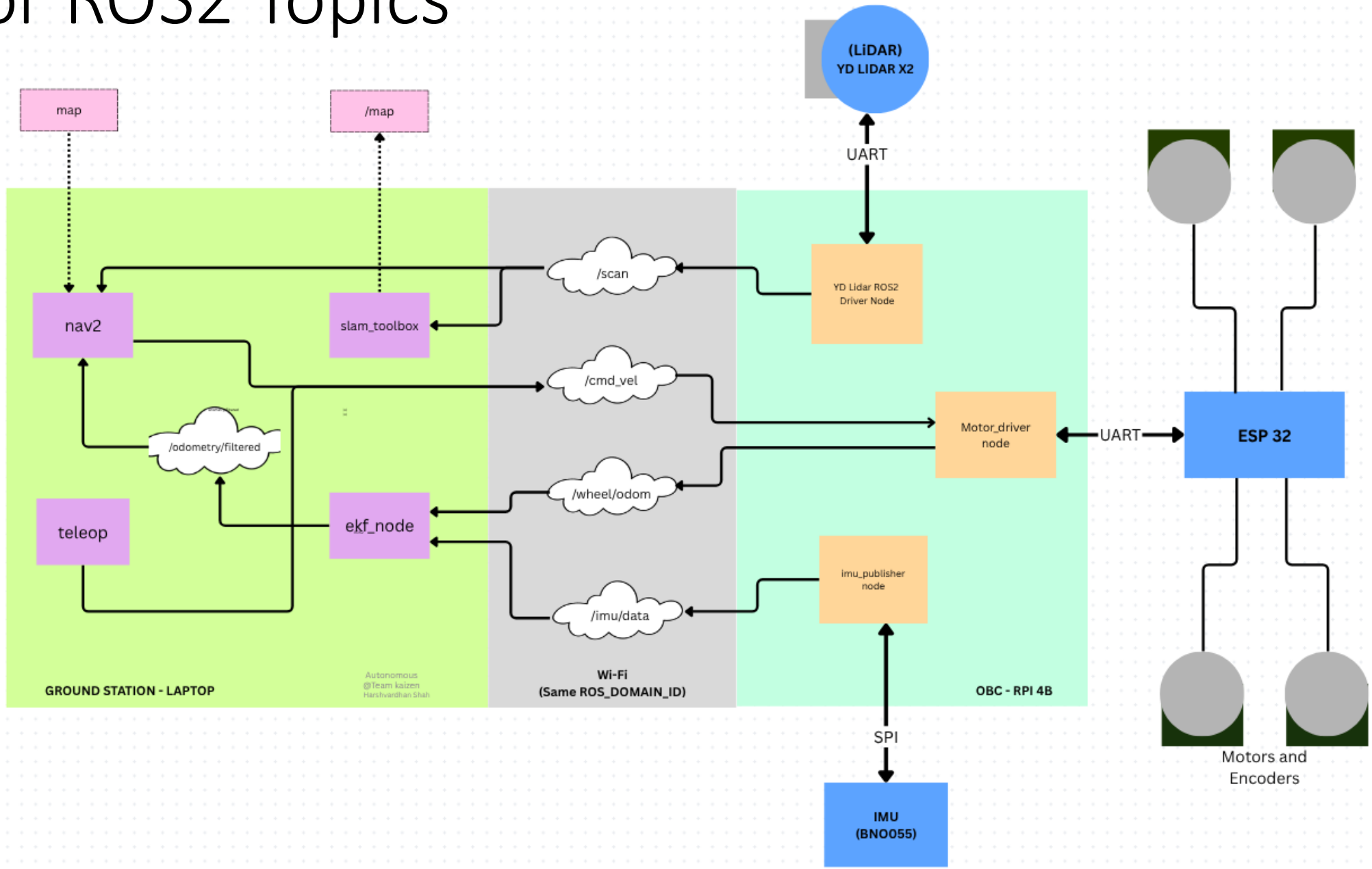

Low Level Controller Architecture

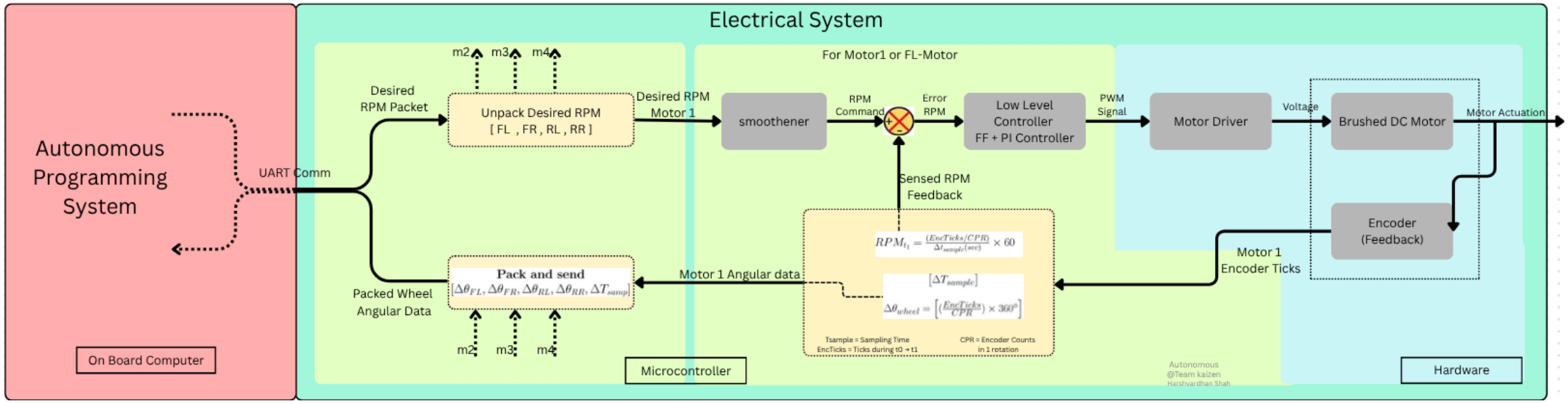

Effect Of T_Sampling and EncRes on control loop

The accuracy and resolution of speed estimation using an incremental encoder are strongly influenced by the encoder counts per revolution (CPR) and the selected sampling time. Since encoder outputs are discrete in nature, the number of pulses accumulated within a fixed sampling interval is an integer value, which introduces quantization effects in the calculated speed. These effects become more pronounced when the sampling time is short or when the encoder resolution is low.
Consider an incremental encoder with a resolution of 1000 counts per revolution (CPR) and a sampling interval of ΔT=100ms. Assuming the motor rotates at a constant speed of 30 RPM, the expected number of encoder counts per sampling interval can be calculated as follows:

30 RPM = 30 / 60 = 0.5 rev/s

Revolutions in 100 ms:

0.5 * 0.1 = 0.05 rev

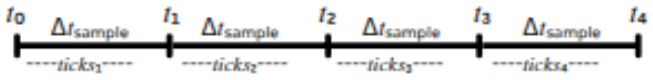

Expected encoder counts:

0.05 * 1000 = 50 counts

Due to quantization, the measured encoder counts may vary between adjacent integer values. For instance, if 49 counts are observed during the sampling interval t0 → t1, the corresponding speed estimate is:

RPM_t1 = (49 / 1000) * (60 / 0.1) = 29.4 RPM

Similarly, if 51 counts are observed during the subsequent interval t1 → t2, the estimated speed becomes:

RPM_t2 = (51 / 1000) * (60 / 0.1) = 30.6 RPM

It is important to note that the speed estimate is updated only at the end of each sampling interval. As a result, during the entire interval between t1 and t2, the encoder feedback available to the control system remains at 29.4 RPM, and it is only updated to 30.6 RPM at time t2. This introduces a zero-order hold effect in the speed feedback, effectively adding a delay equal to the sampling time.
The minimum measurable change in speed (resolution) for this configuration is determined by a single encoder count:

Delta_RPM = (1 / 1000) * (60 / 0.1) = 0.6 RPM

Increasing the sampling time improves speed resolution by allowing more encoder counts to be accumulated per sample, thereby reducing quantization-induced fluctuations. However, excessively long sampling intervals increase feedback delay and result in slower system response. Therefore, an appropriate trade-off between encoder resolution and sampling time must be selected to ensure both accurate speed estimation and sufficiently fast feedback for closed-loop motor control.

Nav2 Architecture

Explanation

- A goal is given to the navigation system.
- The global planner computes the best path on the map.
- Costmaps represent obstacles from live sensor data.
- The local controller avoids obstacles and follows the path.
- Final velocity commands are sent to the robot base.

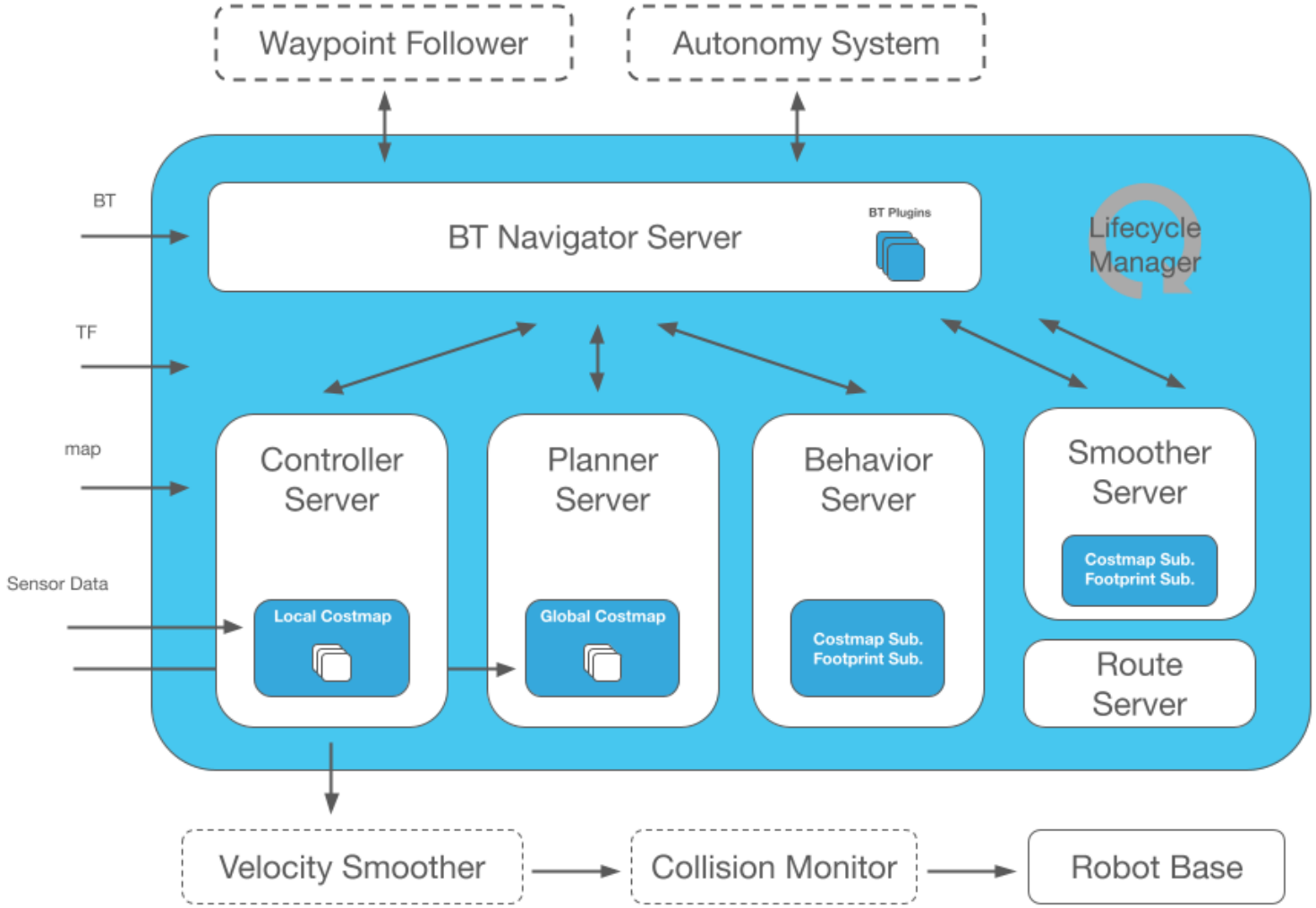

First SLAM Mapping Test

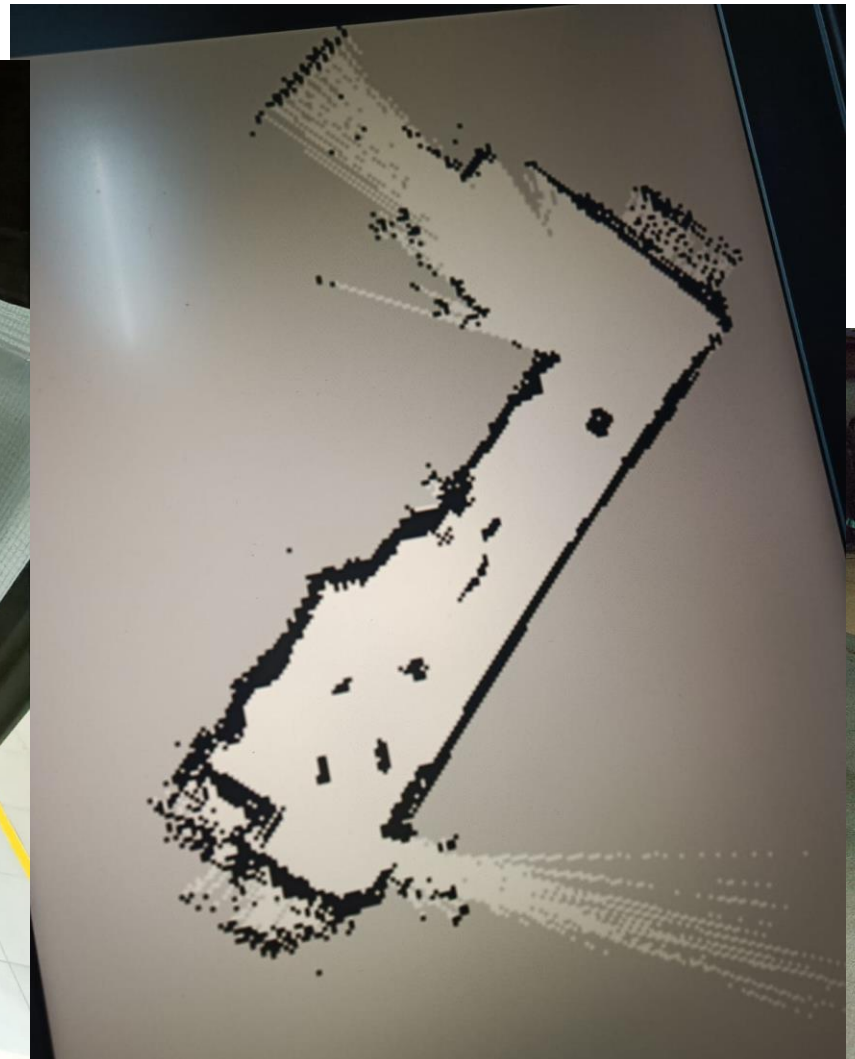

First SLAM Mapping Test

[video]

Testing and Validation (Day 6)

- Test Arena Setup

- SLAM based mapping result

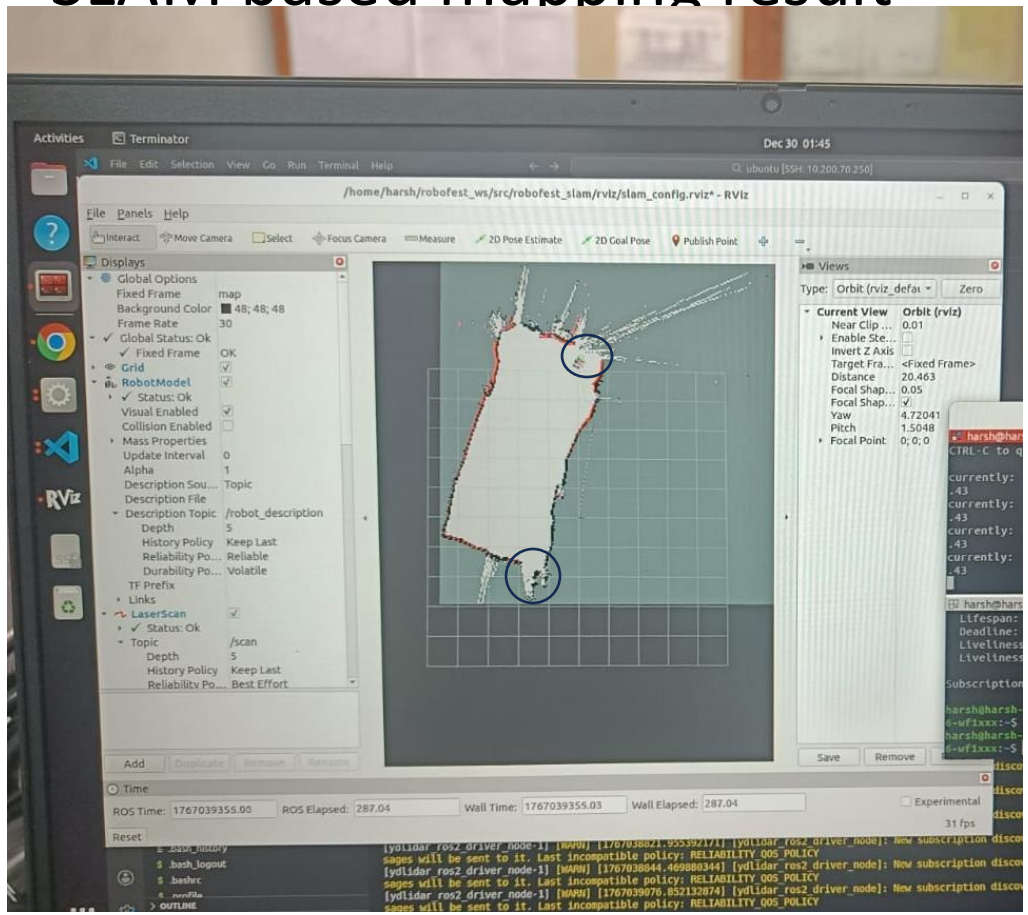

Measurement & Error Analysis

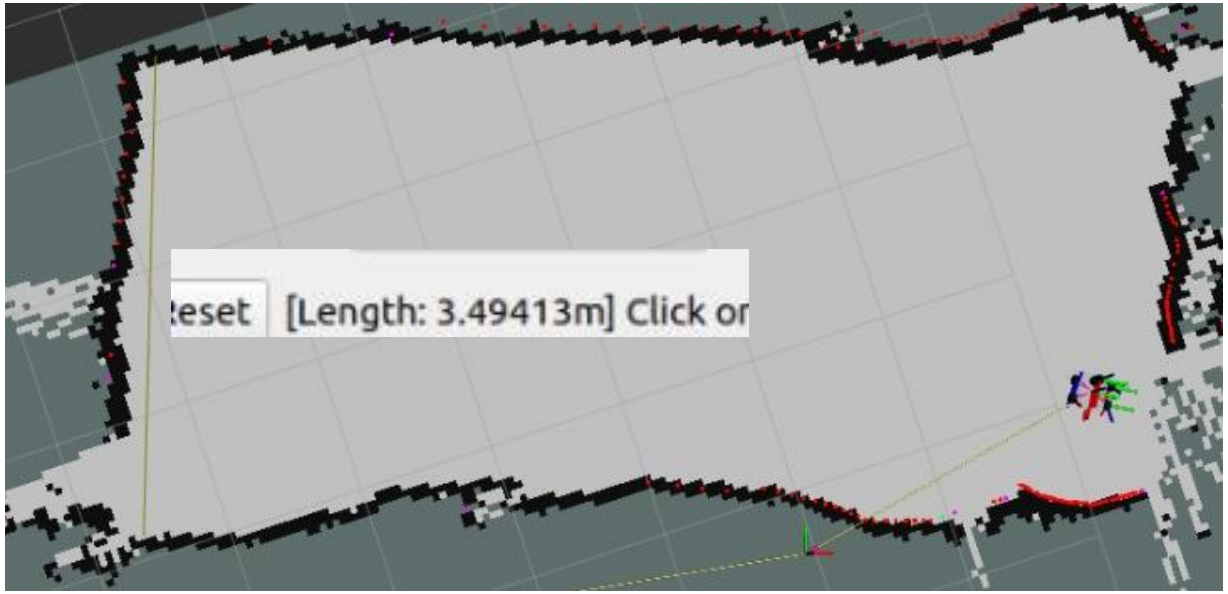

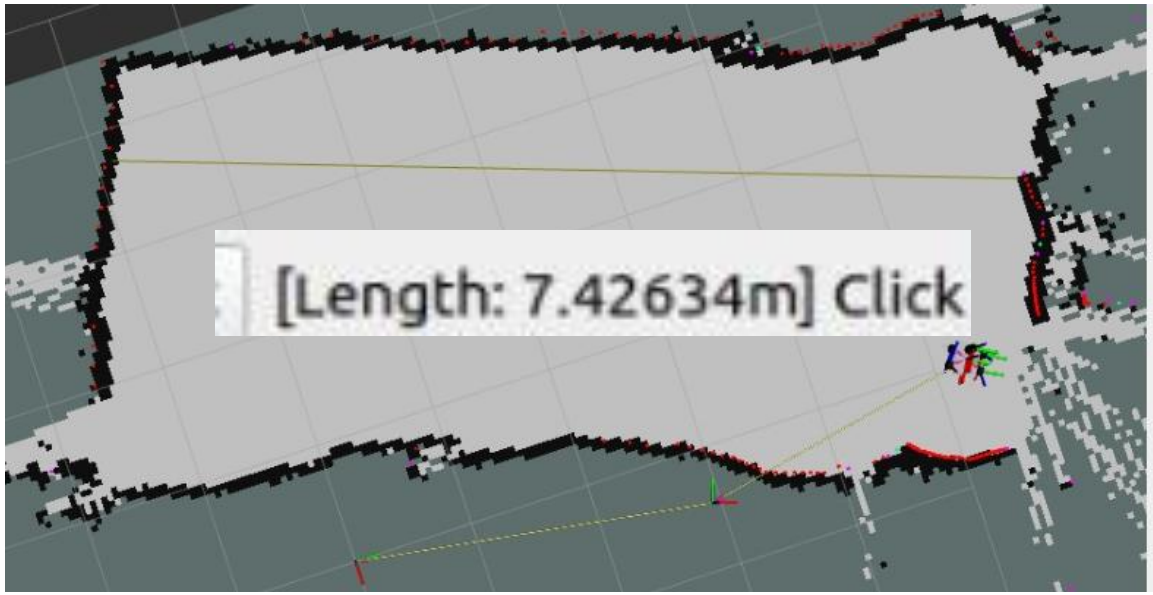

Measurement: 3.45m
%error: 1.15%

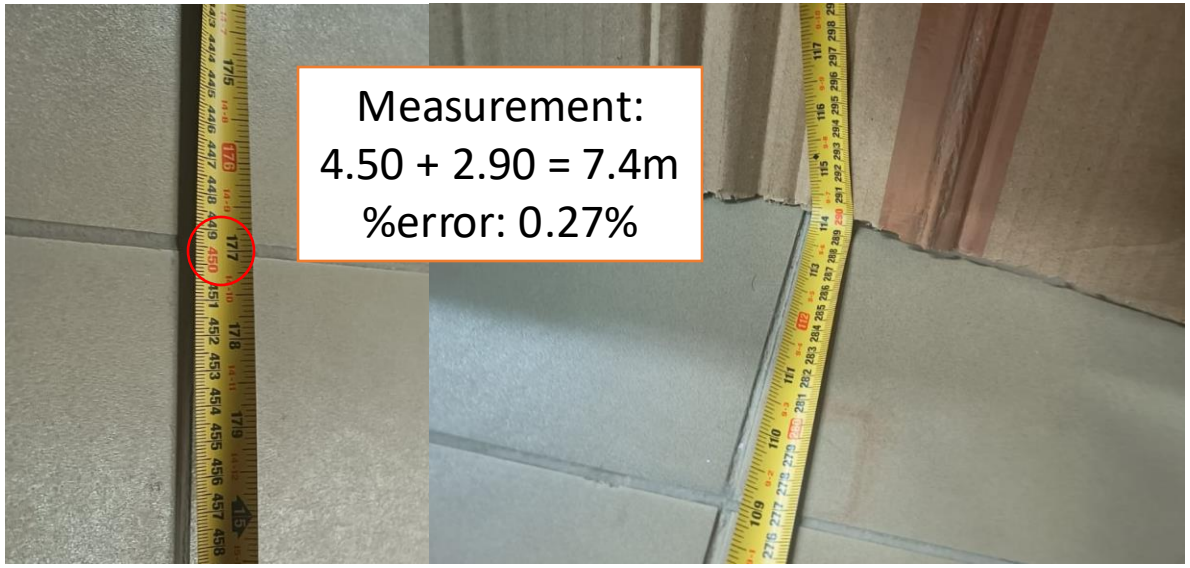

Measurement:
4.50 + 2.90 = 7.4m
%error: 0.27%

Dynamic Obstacle Testing

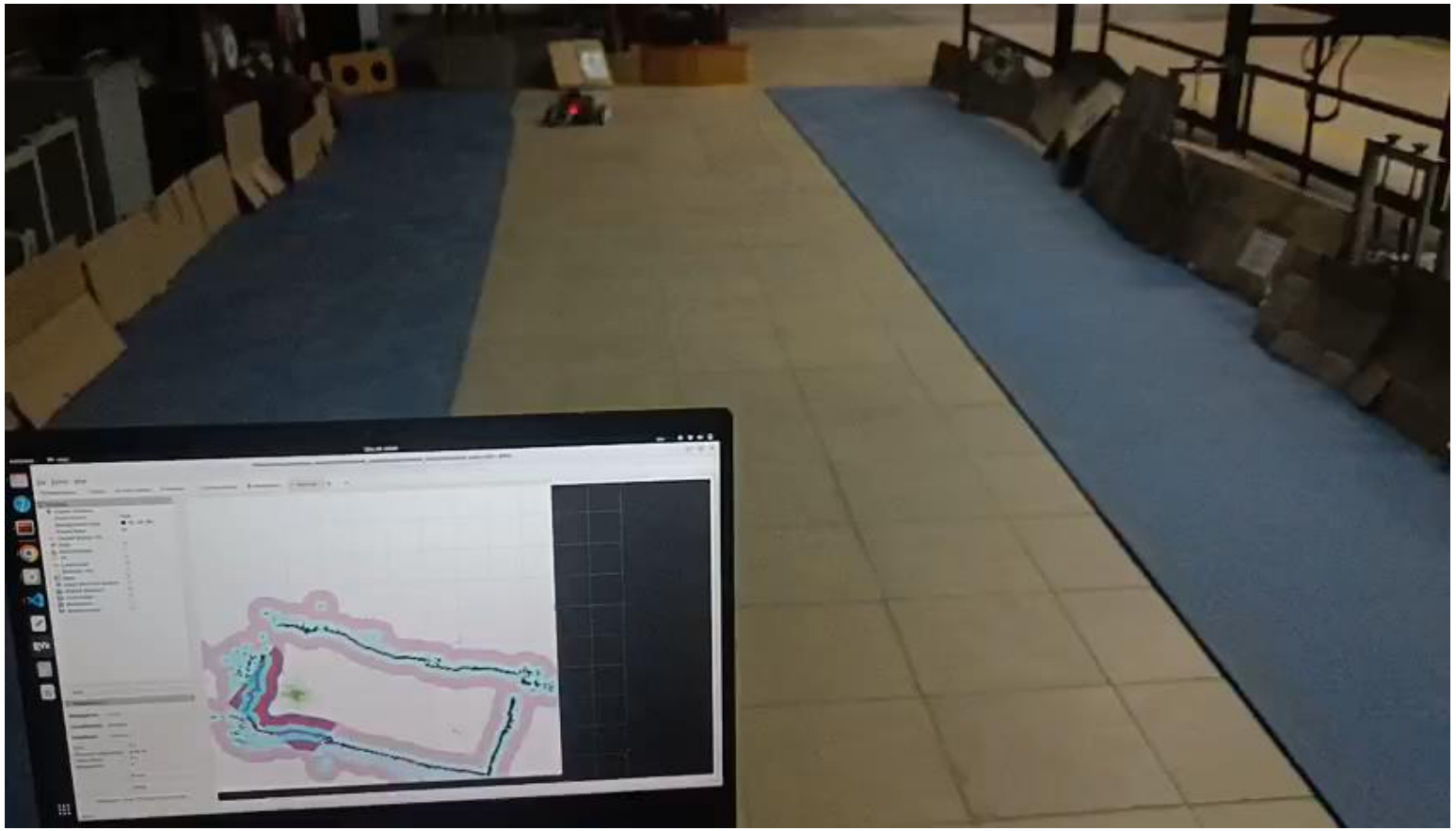

[Video]

[Video]

Motor Testing

[video]