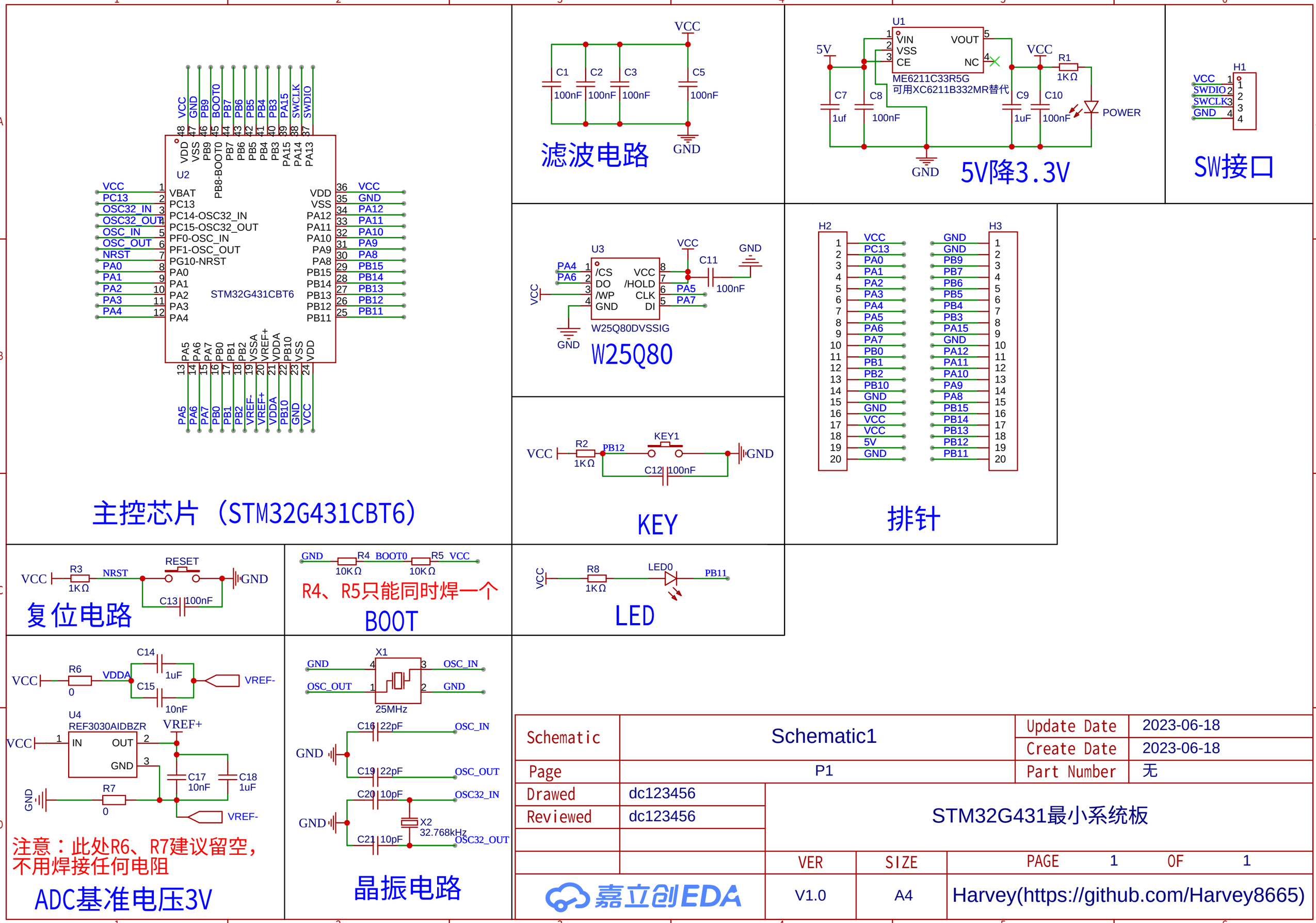

Schematic	Schematic1	Update Date	2023-06-18
		Create Date	2023-06-18
Page	P1	Part Number	无
Drawed	dc123456	STM32G431最小系统板	
Reviewed	dc123456		
		VER	SIZE	PAGE 1 OF 1
嘉立创EDA		V1.0	A4	Harvey(https://github.com/Harvey8665)