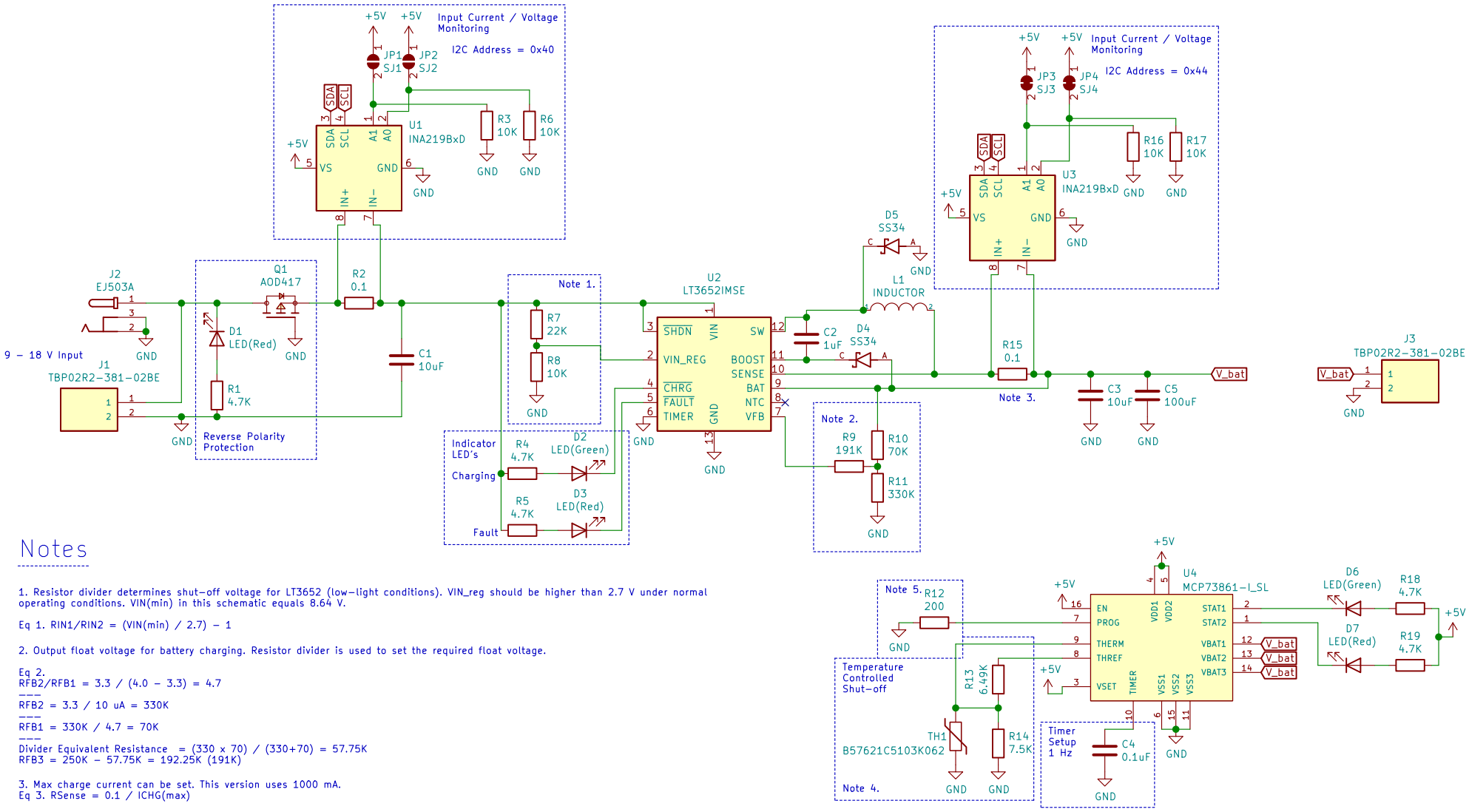

Notes

1. Resistor divider determines shut−off voltage for LT3652 (low−light conditions). VIN_reg should be higher than 2.7 V under normal operating conditions. VIN(min) in this schematic equals 8.64 V.

Eq 1. RIN1/RIN2 = (VIN(min) / 2.7) − 1

2. Output float voltage for battery charging. Resistor divider is used to set the required float voltage.

Eq 2.
RFB2/RFB1 = 3.3 / (4.0 − 3.3) = 4.7

RFB2 = 3.3 / 10 uA = 330K

RFB1 = 330K / 4.7 = 70K

Divider Equivalent Resistance = (330 x 70) / (330+70) = 57.75K
RFB3 = 250K − 57.75K = 192.25K (191K)

3. Max charge current can be set. This version uses 1000 mA.
Eq 3. RSense = 0.1 / ICHG(max)

4. Thermistor characteristics equals 10K at 25 degrees Celsius. Shut−off charge conditions equal −10 and +60 degrees Celsius.
Eq 4. RT1 = (2 x Rcold x Rhot) / (Rcold − Rhot)
Eq 5. RT2 = (2 x Rcold x Rhot) / (Rcold − 3 x Rhot)

5. 200 ohm resistor equals 1000mA max charge current.
Eq 6. R_Prog = (13.2 − 11 x I_Reg) / (12 x I_Reg − 1.2)

Datasheets

1. LT3652 − https://www.analog.com/media/en/technical−documentation/data−sheets/3652fe.pdf
2. MCP73861 − https://ww1.microchip.com/downloads/en/DeviceDoc/21893F.pdf
3. B57621C5 − https://www.tdk−electronics.tdk.com/inf/50/db/ntc/NTC_SMD_Standard_series_1206.pdf

MPTT Solar Charger

MPTT solar charger with battery management and I2C input and output monitoring. Built for use with 12 V solar panels and 18650 cell(s). Features reverse polarity protection and a DC jack for charging when solar is not available.

Sheet: /		
File: mptt−solar−charger.sch		
Title: MPTT Solar Charger		
Size: A4	Date: 27rd April 2022	**Rev:** 1.2
KiCad E.D.A. kicad (5.1.12−1−10_14)		Id: 1/1