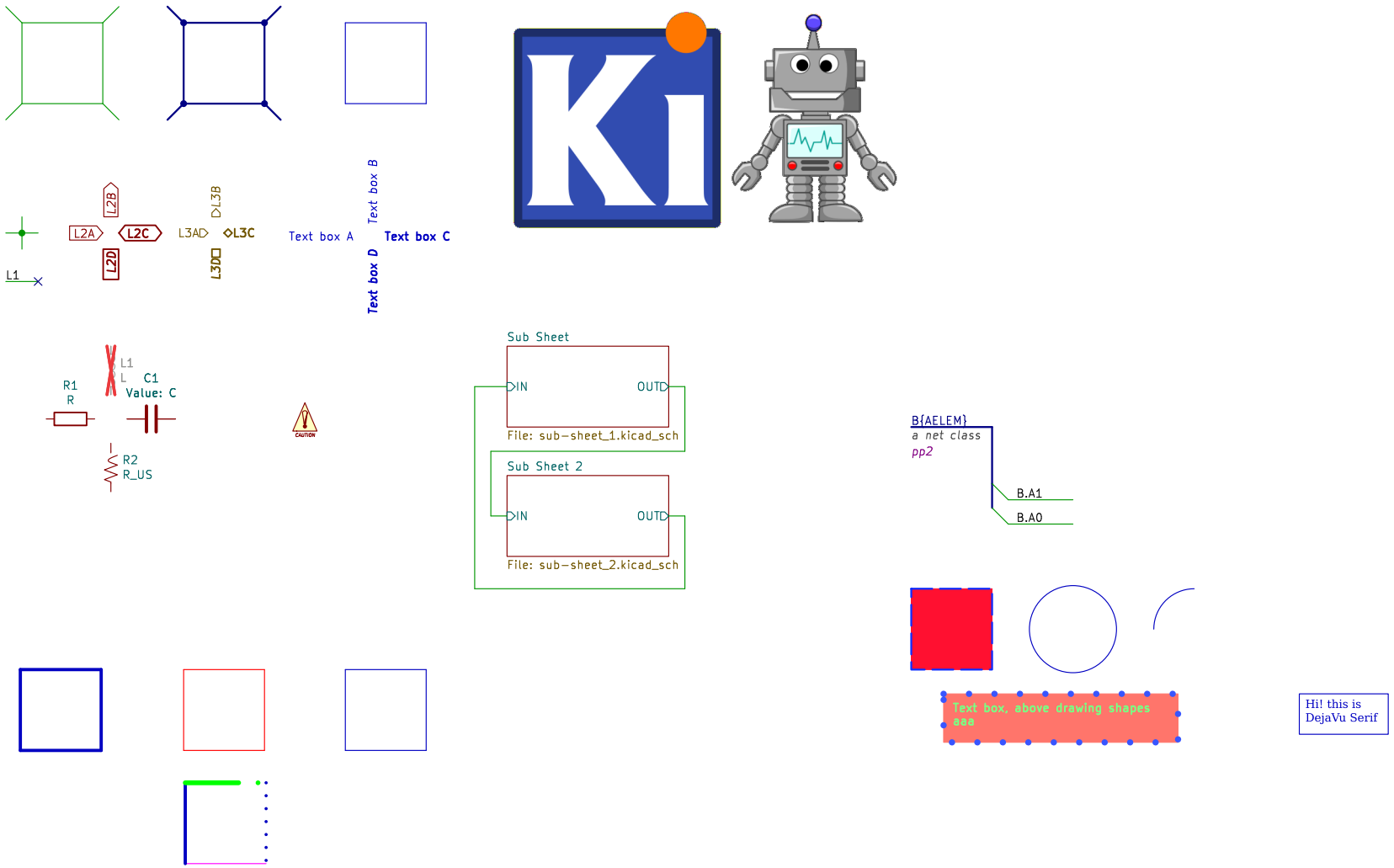

@Comment4@
Comment 3
Comment 2
Comment 1
Company
Sheet: /
File: test_v5.kicad_sch

Title: Title

Size: A4	Date: 2020-08-12	**Rev: r1B**
KiCad E.D.A. kicad-cli 7.0.0-262-g117d431f25-dirty-fork+411c9707eeled-dy15		

Sheet: /Sub Sheet/Deeper test/
File: deeper_3.kicad_sch

Title:

Size: A4	Date:	**Rev:**
KiCad E.D.A. kicad-cli 7.0.0-262-g117d431f25-dirty-fork+411c9707ee	id: 2/5	

Sheet: /Sub Sheet 2/Deeper test/
File: deeper_4.kicad_sch

Title:

Size: A4	Date:	**Rev:**
KiCad E.D.A. kicad-cli 7.0.0-262-g117d431f25-dirty-fork+411c9707ee		id: 1/1

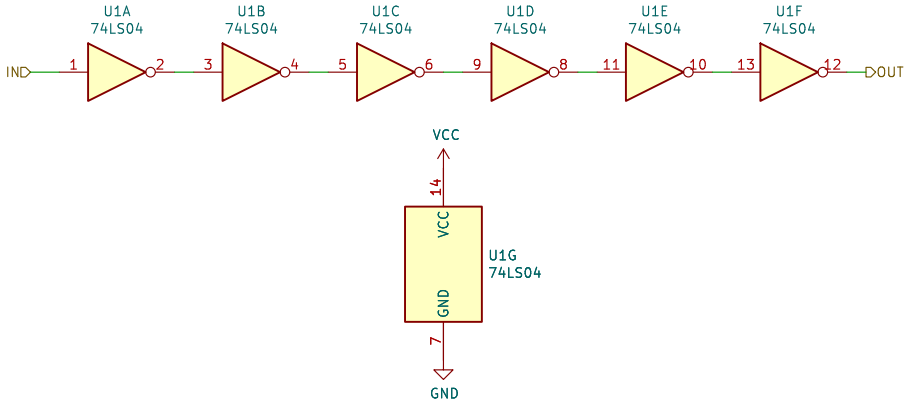

Deeper test

File: deeper_3.kicad_sch

Sheet: /Sub Sheet/
File: sub-sheet_1.kicad_sch

Title:

Size: User | Date: | **Rev:**

KiCad E.D.A. kicad-cli 7.0.0-262-g117d431f25-dirty-fork+411c9707ee | Id: 1/1

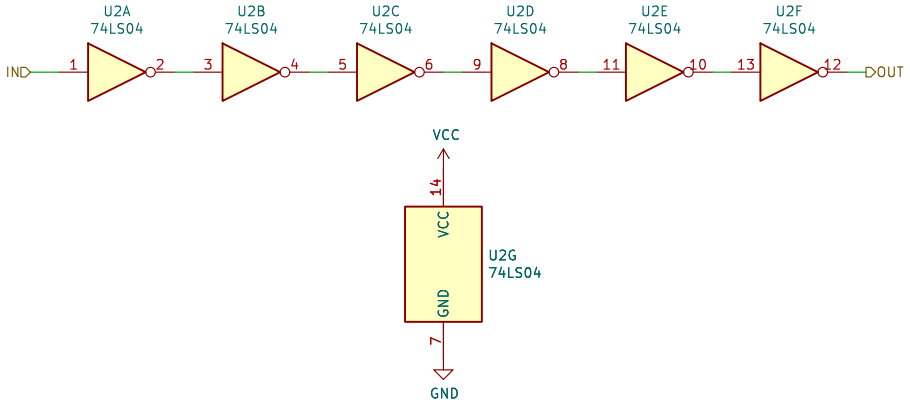

Deeper test

File: deeper_4.kicad_sch

Sheet: /Sub Sheet 2/
File: sub-sheet_2.kicad_sch

Title:

Size: User | Date: | **Rev:**

KiCad E.D.A. kicad-cli 7.0.0-262-g117d431f25-dirty-fork+411c9707ee+deb11 | Id: 5/15