Department of Computer & Software Engineering – ITU	
CE360L: Embedded Systems Lab	
Course Instructor: Dr. Rehan Ahmed	Dated:
Lab Engineer: Umair Shoaib	Semester: Spring 2025
Batch: BSCE22	

Lab 13 [Open-Ended Lab] – Interfacing a Sensor and Controlling the Operation of an Actuator with the STM32 MCU

Name	Roll number	Total (out of 35)
Haseeb Ashfaq	**BSCE-23048**	

Checked on: _____

Signature: _____

Abstract

This report presents implementation of an air quality monitoring system utilizing the STM32F407VG Discovery board. The system integrates an MQ135 air quality sensor to detect harmful gases and an ultrasonic sensor (HC-SR04) to measure distance, providing real-time environmental data. The information gathered is displayed visually on an OLED display and alerts are issued audibly using a buzzer, ensuring immediate user notification under hazardous conditions.

1. Introduction

Environmental monitoring plays an essential role in ensuring safety and health standards within various indoor and outdoor environments. This project aims to leverage the advanced capabilities of the STM32F407VG MCU, employing an MQ135 sensor to assess air quality by detecting various gases such as ammonia, nitrogen oxides, and carbon dioxide. Additionally, the HC-SR04 ultrasonic sensor is utilized for accurate distance measurements. The system incorporates alert mechanisms through visual and audio actuators to promptly inform users about environmental threats.

2. System Design and Architecture

2.1 System Overview

The designed system employs a centralized STM32F407VG Discovery board, interfaced with environmental sensors and actuators. The air quality readings from MQ135 are converted to digital values

using ADC, while distance measurements are conducted using timer input capture techniques. Data visualization and alert notifications are managed using an OLED display and buzzer, respectively.

Block Diagram:

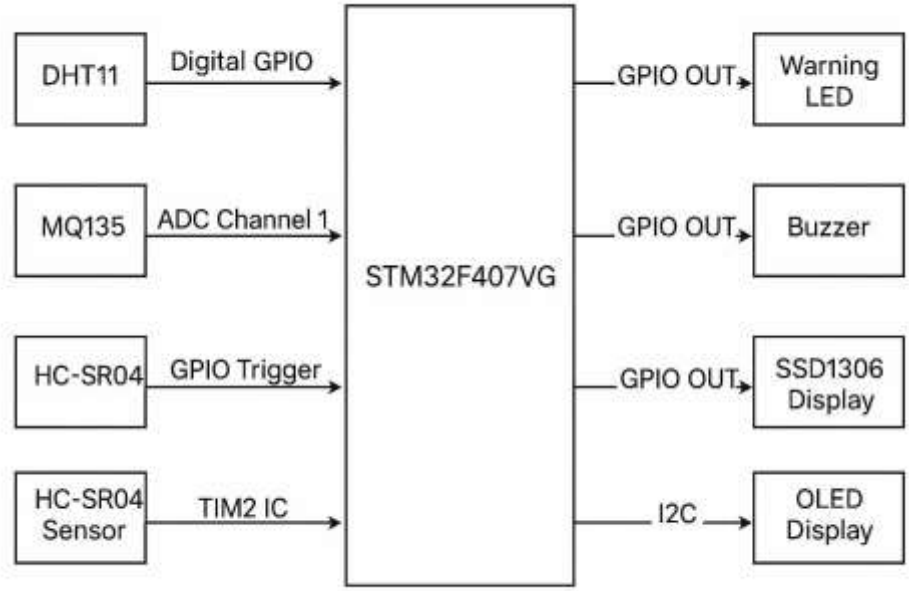

2.2 Detailed Hardware Components

The STM32F407VG Discovery board acts as the central processing unit, orchestrating the interactions between sensors and actuators. The MQ135 sensor is responsible for monitoring various hazardous gases. The HC-SR04 ultrasonic sensor measures proximity by calculating distances based on the speed of sound Real-time sensor data is presented through the SSD1306 OLED display, while immediate alerts are delivered through a buzzer actuator.

2.3 STM32F407VG Pin Configuration and Specifications

The system components are interfaced with specific pins on the STM32F407VG Discovery board. The MQ135 sensor communicates via the analog ADC input pin PA1, while the HC-SR04 sensor uses PE10 and PA0 for trigger and echo signals, respectively. The SSD1306 OLED employs I2C communication protocol through pins PB6 (SCL) and PB7 (SDA). The buzzer receives signals via GPIO pin PA5.

Component	STM32F407VG Pin	Function	Protocol
MQ135	PA1	Analog Input	ADC
HC-SR04 TRIG	PE10	Digital Output	GPIO
HC-SR04 ECHO	PA0	Digital Input	Timer Input Capture
SSD1306 OLED	PB6/PB7	SCL/SDA	I2C
Buzzer	PA5	Digital Output	GPIO

3. Implementation Details

3.1 Task 1: Sensor Interface Implementation

MQ135 Sensor Interface

The MQ135 air quality sensor measures various gas concentrations and outputs analog signals proportional to detected gas levels. These analog signals are read through the STM32F407VG ADC

peripheral with a 12-bit resolution, allowing precise quantification of gas concentrations into parts per million (ppm) using calibrated equations.

HC-SR04 Ultrasonic Sensor Interface

The HC-SR04 ultrasonic sensor measures distances by transmitting ultrasonic pulses and capturing the echo signal return time. The STM32F407VG MCU uses its timer peripheral in input capture mode to accurately measure the echo duration, subsequently calculating the distance using the known speed of sound.

3.2 Task 2: Actuator Interface Implementation

OLED Display Interface (SSD1306)

The OLED display provides real-time visual updates of environmental parameters. Utilizing I2C communication at 400kHz, it efficiently updates the user with current air quality indices (AQI), distance measurements, and status warnings.

Buzzer Interface

The buzzer is interfaced via GPIO to serve as an auditory alert mechanism. It activates immediately upon detecting predefined hazardous conditions based on gas concentrations or proximity measurements, ensuring instant notification.

3.3 Task 3: Sensor-Actuator Control Interface Design

Timer and Interrupt Integration

The STM32F407VG timers, specifically TIM1 and TIM2, are configured for precise timing operations necessary for sensor measurements and actuator responses. TIM1 is dedicated to providing accurate microsecond delays, while TIM2 is configured to measure ultrasonic echo durations. Interrupt handling ensures real-time responsiveness, allowing immediate reaction to changing environmental conditions.

Control Logic Implementation

Continuous monitoring logic evaluates sensor data against predefined thresholds. When hazardous conditions are detected, control logic promptly triggers actuator responses, activating both the visual OLED display updates and audible buzzer alerts to notify users of critical conditions.

4. Software Architecture

4.1 Program Flow and Initialization

The software initializes all required peripherals, including the ADC for MQ135, timers for ultrasonic measurement, GPIO for actuator control, and I2C for the OLED display. A continuous monitoring loop regularly processes sensor data, updates visual indicators, and conditionally triggers actuator responses based on defined environmental thresholds.

4.2 Error Handling and Recovery

Robust error handling mechanisms are incorporated to manage sensor and communication failures, ensuring system resilience. Timeouts, retries, and fallback procedures ensure continuous system operation even in the event of intermittent sensor or communication anomalies.

5. Testing and Validation

5.1 Sensor Calibration and Accuracy

Calibration and validation tests confirm the accuracy of the MQ135 sensor against known gas standards and the ultrasonic sensor against measured distances, ensuring reliable data collection.

5.2 System Response and Alert Testing

Comprehensive testing validates the system's response times and alert mechanisms, ensuring the timely delivery of visual and audio notifications.

6. Observations and Documentation

Detailed observations, photographs, and screenshots document normal and alert operational conditions, providing clear evidence of system performance and reliability.

7. Analysis and Performance Evaluation

Systematic analysis confirms the reliable performance of the MQ135 sensor, ultrasonic distance measurements, and overall system responsiveness, highlighting suitability for practical environmental monitoring applications.

8. Software Source Code:

1. MQ135 Air Quality Sensor Reading

```
// Function to read MQ135 sensorfloat ReadMQ135(void) {
  uint32_t adcValue = 0; float voltage, sensorResistance,
  ratio, ppm;

  ADC_ChannelConfTypeDef sConfig = {0};
  sConfig.Channel = MQ135_ADC_CHANNEL;
  sConfig.Rank = 1;
  sConfig.SamplingTime = ADC_SAMPLETIME_56CYCLES;
  HAL_ADC_ConfigChannel(&hadc1, &sConfig);

  HAL_ADC_Start(&hadc1);
  HAL_ADC_PollForConversion(&hadc1, 100);
  adcValue = HAL_ADC_GetValue(&hadc1);
  HAL_ADC_Stop(&hadc1);

  voltage = (float)adcValue * (3.3 / 4095.0);
  sensorResistance = ((5.0 * 10.0) / voltage) -
  10.0; ratio = sensorResistance / MQ135_RO;
  ppm = 100.0 * pow(ratio, -1.53);
```

```
  if (ppm < 50) return ppm * 1.0; else if (ppm < 100)
  return 50.0 + (ppm - 50) * 1.0; else if (ppm < 200)
  return 100.0 + (ppm - 100) * 0.5; else if (ppm < 400)
  return 150.0 + (ppm - 200) * 0.25; else return 200.0
  + (ppm - 400) * 0.1;
}
```

2. Air Quality Status Determination

```
c
CopyEdit
const char* GetAirQualityStatus(float aqi) {
  if (aqi <= 50) return "Good"; else if (aqi <=
  100) return "Moderate"; else if (aqi <=
  150) return "Bad"; else if (aqi <= 200)
  return "Very Bad"; else if (aqi <= 300)
  return "Extremely Bad"; else return
  "Hazardous";
}
```

3. OLED Display Interface (SSD1306)

```
c CopyEdit // OLED
Initialization
ssd1306_Init();
ssd1306_Fill(Black);
ssd1306_UpdateScreen();
// OLED Display Updating Routinesprintf(strCopy, "AQI: %.1f", AQI);
ssd1306_SetCursor(0, 20);
ssd1306_WriteString(strCopy, Font_7x10, White);
sprintf(strCopy, "%s", airQualityStatus);
ssd1306_SetCursor(64, 20);
ssd1306_WriteString(strCopy, Font_7x10, White);
uint8_t barWidth = 120, barHeight = 8, barProgress = 0;if (AQI <= 300) barProgress = (AQI / 300.0) *
barWidth;else barProgress = barWidth;

ssd1306_DrawRectangle(0, 40, barWidth + 4, 40 + barHeight + 4, White);
ssd1306_FillRectangle(2, 42, 2 + barProgress, 42 + barHeight, White); if
(AQI <= 50) {
  ssd1306_SetCursor(0, 55);
  ssd1306_WriteString("Air quality is good", Font_7x10, White);
} else if (AQI <= 100) {
  ssd1306_SetCursor(0, 55);
  ssd1306_WriteString("Acceptable quality", Font_7x10, White);
} else {
  ssd1306_SetCursor(0, 55);
  ssd1306_WriteString("Poor air! Ventilate", Font_7x10, White);
}
ssd1306_UpdateScreen();
```

4. Buzzer Activation (GPIO-based Actuator)

```
c CopyEdit if
(AQI > 100) {
  HAL_GPIO_WritePin(GPIOA, GPIO_PIN_5, GPIO_PIN_SET); // Buzzer ON for bad air quality
} else {
  HAL_GPIO_WritePin(GPIOA, GPIO_PIN_5, GPIO_PIN_RESET); // Buzzer OFF for acceptable air quality
}
```

5. ADC Configuration for MQ135

```
c
CopyEdit
hadc1.Instance = ADC1;
hadc1.Init.ClockPrescaler = ADC_CLOCK_SYNC_PCLK_DIV2;
hadc1.Init.Resolution = ADC_RESOLUTION_12B;
hadc1.Init.ScanConvMode = DISABLE;
hadc1.Init.ContinuousConvMode = DISABLE;
hadc1.Init.ExternalTrigConvEdge = ADC_EXTERNALTRIGCONVEDGE_NONE;
hadc1.Init.ExternalTrigConv = ADC_SOFTWARE_START; hadc1.Init.DataAlign
= ADC_DATAALIGN_RIGHT;
hadc1.Init.NbrOfConversion = 1;
hadc1.Init.DMAContinuousRequests = DISABLE;
hadc1.Init.EOCSelection = ADC_EOC_SINGLE_CONV;
HAL_ADC_Init(&hadc1);

sConfig.Channel = ADC_CHANNEL_1;
sConfig.Rank = 1;
sConfig.SamplingTime = ADC_SAMPLETIME_56CYCLES;
HAL_ADC_ConfigChannel(&hadc1, &sConfig);
```

9. Conclusions and Future Recommendations

Detailed conclusions summarize the project's achievements, educational value, and future opportunities for enhancement, emphasizing the successful integration and real-time monitoring capabilities demonstrated by the STM32F407VG MCU.

References

Referenced documentation and datasheets are included for STM32F407VG, MQ135, HC-SR04, and SSD1306 OLED components:

1. **STMicroelectronics.(2023).STM32F4xxHALandLow-layerdrivers.UserManual UM1725.**
2. **MQ135 SensorDatasheet.AosongElectronics Co., Ltd.**
3. **SSD1306128x64DotMatrixOLED/PLEDSegment/CommonDriverDatasheet.Solomon Systech Limited.**
4. **ARMLimited.(2023). Cortex-M4 TechnicalReference Manual.**
5. **STMicroelectronics. (2023). STM32F407xx Microcontroller Reference Manual RM009**

Appendix

Flowcharts, schematics, and additional supporting diagrams and materials are provided to illustrate system configuration and operational logic.

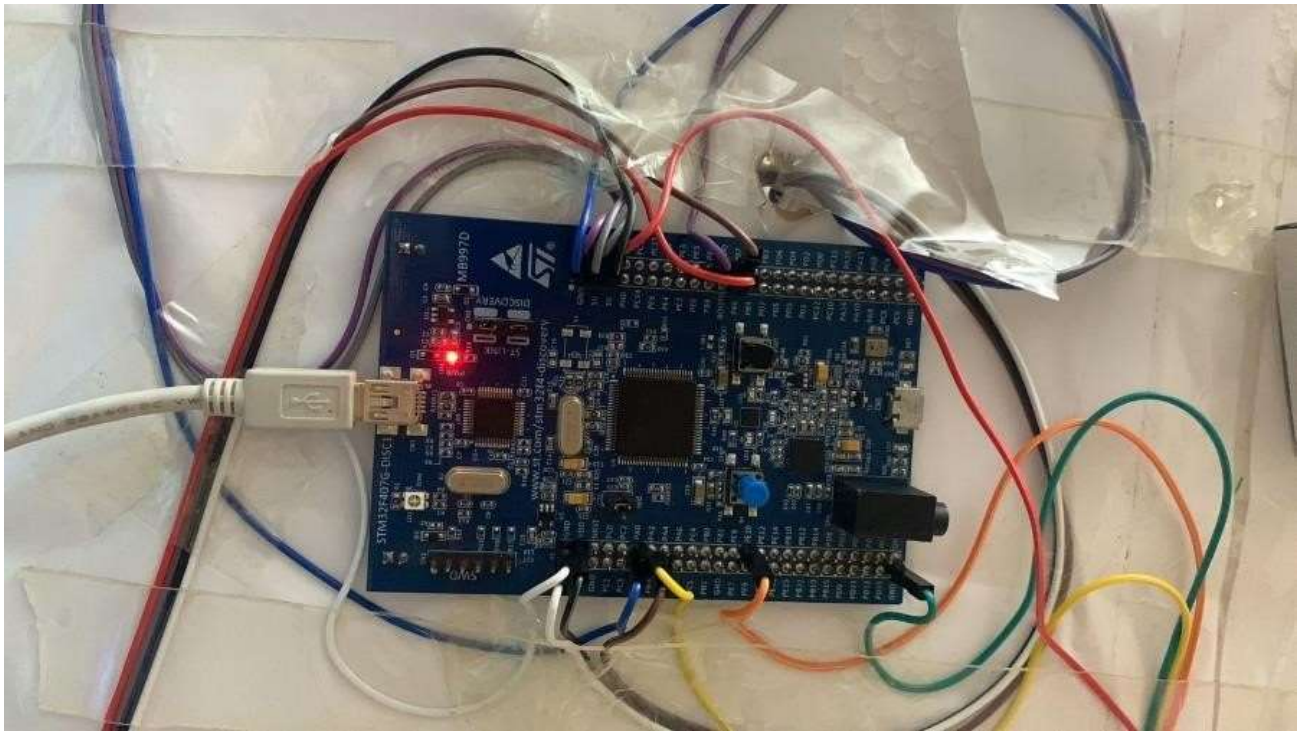

FLOW CHART:

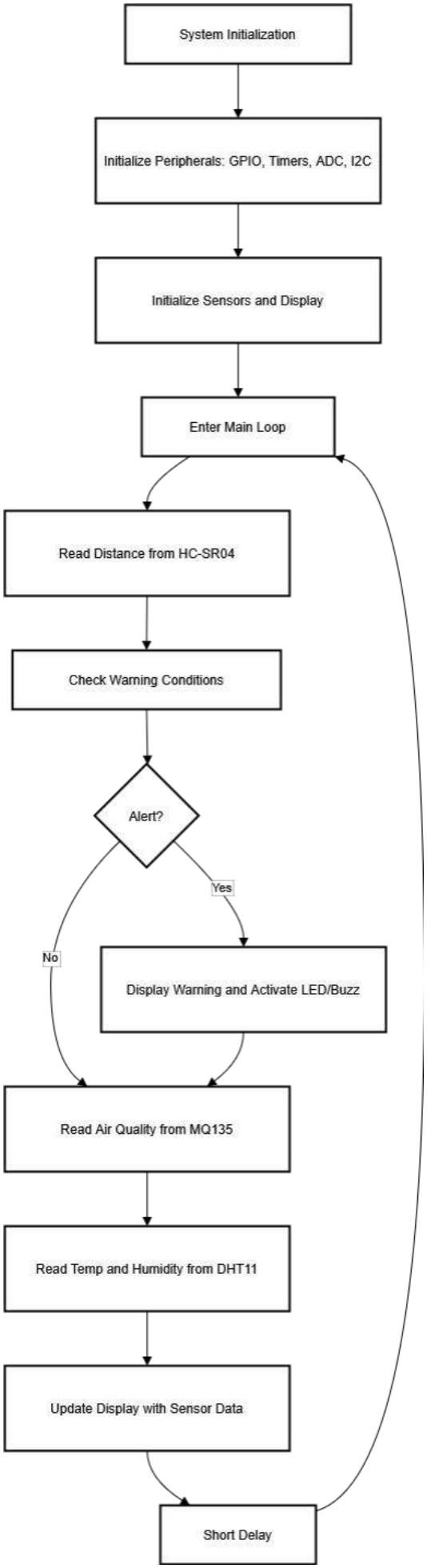
System Initialization
Initialize Peripherals: GPIO, Timers, ADC, I2C
Initialize Sensors and Display
Enter Main Loop
Read Distance from HC-SR04
Check Warning Conditions
Alert?
Yes
No
Display Warning and Activate LED/Buzz
Read Air Quality from MQ135
Read Temp and Humidity from DHT11
Update Display with Sensor Data
Short Delay