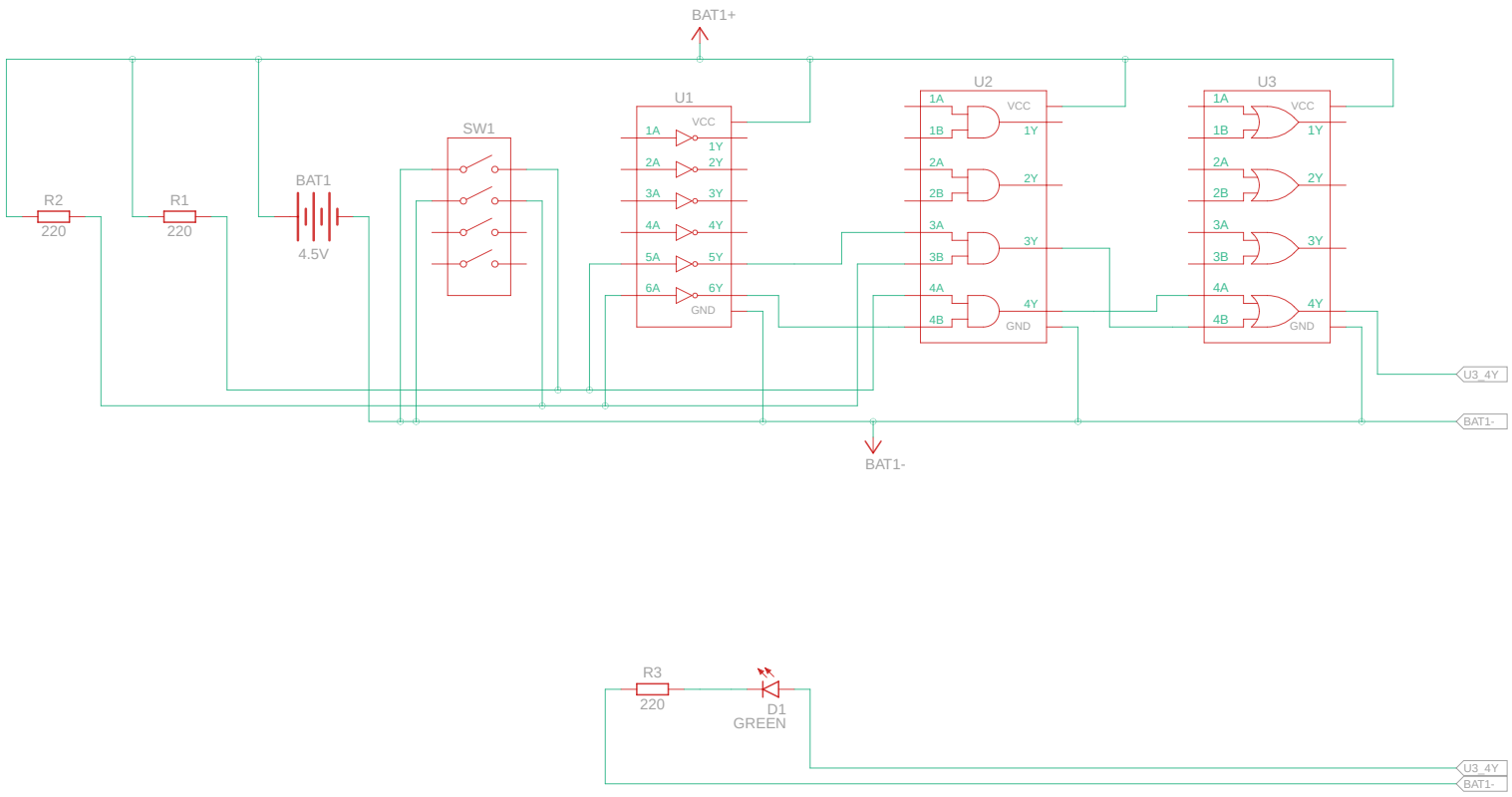

Made with Tinkercad®

Title: XOR Gate

Date: 2/2/2022, 7:33:23 PM

Sheet: 1/1