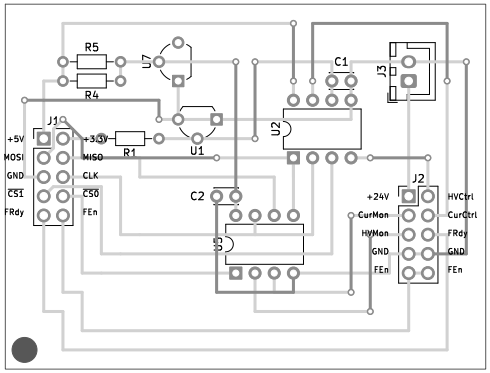

Sheet:
File: raspberry.kicad_pcb

Title:

Size: A4	Date:	**Rev:**
KiCad E.D.A. kicad 7.0.6		Id: 1/1

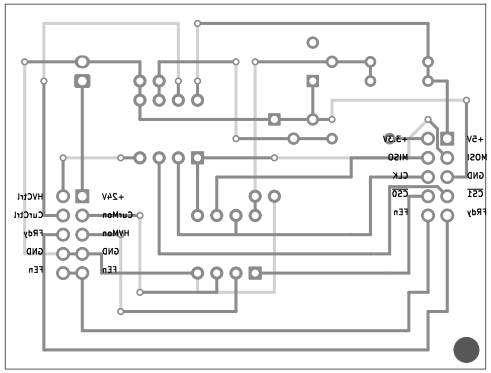

Sheet:
File: raspberry.kicad_pcb

Title:

Size: A4	Date:	**Rev:**
KiCad E.D.A. kicad 7.0.6		Id: 1/1