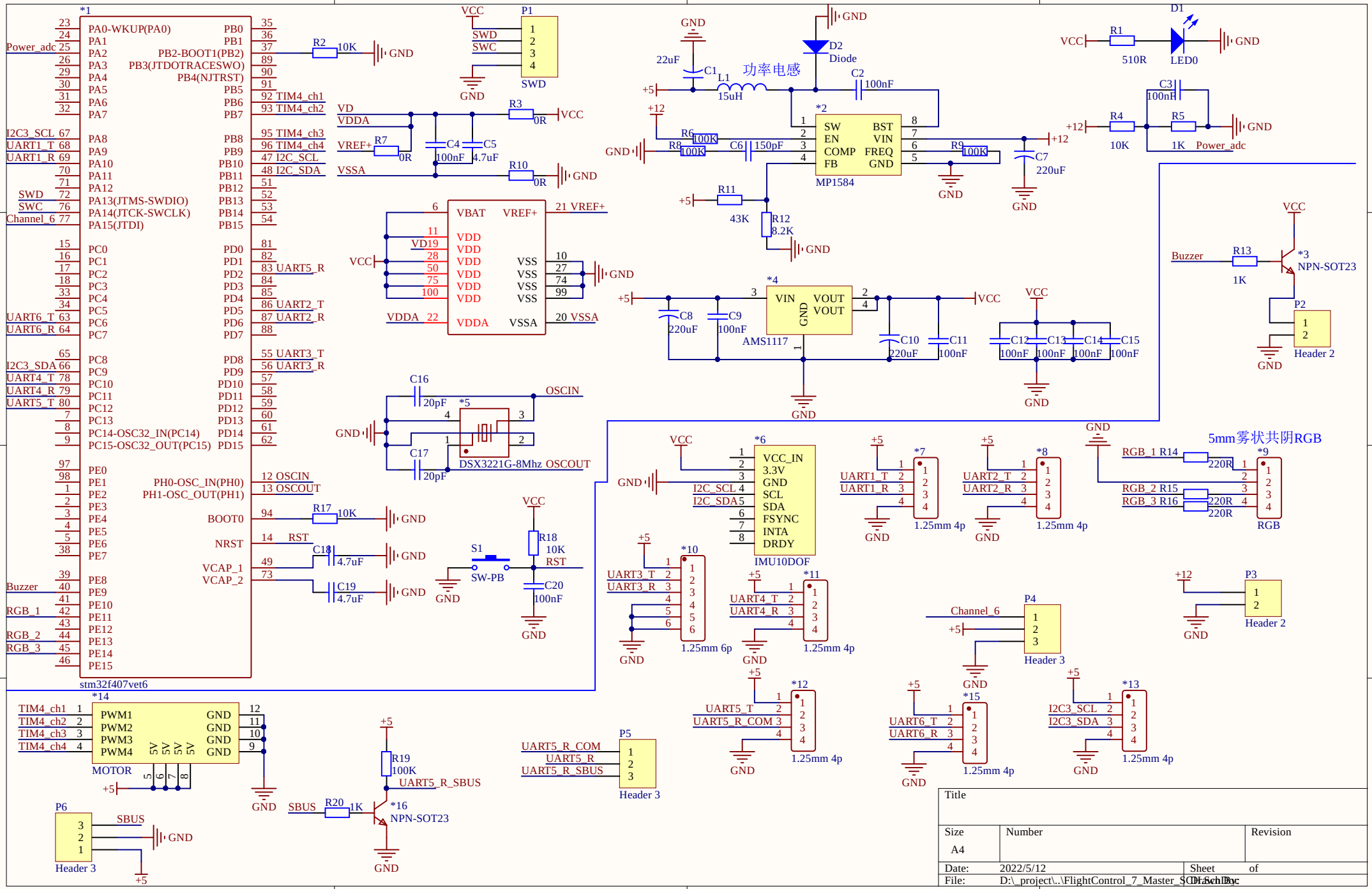
*1
stm32f407vet6
PA0-WKUP(PA0)
PA1
PA2
PA3
PA4
PA5
PA6
PA7
PA8
PA9
PA10
PA11
PA12
PA13(JTMS-SWDIO)
PA14(JTCK-SWCLK)
PA15(JTDI)
PC0
PC1
PC2
PC3
PC4
PC5
PC6
PC7
PC8
PC9
PC10
PC11
PC12
PC13
PC14-OSC32_IN(PC14)
PC15-OSC32_OUT(PC15)
PE0
PE1
PE2
PE3
PE4
PE5
PE6
PE7
PE8
PE9
PE10
PE11
PE12
PE13
PE14
PE15
PB0
PB1
PB2-BOOT1(PB2)
PB3(JTDOTRACESWO)
PB4(NJTRST)
PB5
PB6
PB7
PB8
PB9
PB10
PB11
PB12
PB13
PB14
PB15
PD0
PD1
PD2
PD3
PD4
PD5
PD6
PD7
PD8
PD9
PD10
PD11
PD12
PD13
PD14
PD15
PH0-OSC_IN(PH0)
PH1-OSC_OUT(PH1)
BOOT0
NRST
VCAP_1
VCAP_2
Power_adc
I2C3_SCL
UART1_T
UART1_R
SWD
SWC
Channel_6
UART6_T
UART6_R
I2C3_SDA
UART4_T
UART4_R
UART5_T
Buzzer
RGB_1
RGB_2
RGB_3
TIM4_ch1
TIM4_ch2
TIM4_ch3
TIM4_ch4
UART5_R
UART2_T
UART2_R
UART3_T
UART3_R
I2C_SCL
I2C_SDA
OSCIN
OSCOUT
RST
R2 10K
R3 0R
R7 0R
R10 0R
R17 10K
R18 10K
C4 100nF
C5 4.7uF
C18 4.7uF
C19 4.7uF
C20 100nF
P1
SWD
VCC
GND
VD
VDDA
VREF+
VSSA
*2
MP1584
SW
EN
COMP
FB
BST
VIN
FREQ
GND
D2
Diode
L1
15uH
功率电感
C1 22uF
C2 100nF
C6 150pF
R6 100K
R8 100K
R9 100K
R11 43K
R12 8.2K
C7 220uF
D1
LED0
R1 510R
R4 10K
R5 1K
C3 100nF
VBAT
VREF+
VDD
VSS
VDDA
VSSA
*4
AMS1117
VIN
VOUT
C8 220uF
C9 100nF
C10 220uF
C11 100nF
C12 100nF
C13 100nF
C14 100nF
C15 100nF
*3
NPN-SOT23
R13 1K
P2
Header 2
*5
DSX3221G-8Mhz
C16 20pF
C17 20pF
S1
SW-PB
*6
IMU10DOF
VCC_IN
3.3V
GND
SCL
SDA
FSYNC
INTA
DRDY
*7
*8
*9
*10
*11
*12
*13
*15
1.25mm 4p
1.25mm 6p
RGB_1 R14 220R
RGB_2 R15 220R
RGB_3 R16 220R
5mm雾状共阴RGB
RGB
P3
Header 2
P4
Header 3
*14
MOTOR
PWM1
PWM2
PWM3
PWM4
R19 100K
R20 1K
*16
NPN-SOT23
P5
Header 3
UART5_R_COM
UART5_R
UART5_R_SBUS
P6
Header 3
SBUS
Title
Size
A4
Number
Revision
Date: 2022/5/12
Sheet of
File: D:_project\..\FlightControl_7_Master_SCH.SchDoc
Drawn By: