Multi-UAV Assisted Network Coverage Optimization for Rescue Operations using Reinforcement Learning

Omar Sami Oubbati[1], Hakim Badis[1], Abderrezak Rachedi[1], Abderrahmane Lakas[2], and Pascal Lorenz[3]
[1] LIGM CNRS-UMR 8049, University Gustave Eiffel, Champs-sur-Marne 77420, France.
[2] College of Information Technology, United Arab Emirates University, PO Box 17551, Al Ain, UAE.
[3] IRIMAS Laboratory, University of Haute Alsace, Colmar, France.
{omar-sami.oubbati,hakim.badis,abderrezak.rachedi}@univ-eiffel.fr, alakas@uaeu.ac.ae, pascal.lorenz@uha.fr

2023 IEEE 20th Consumer Communications & Networking Conference (CCNC) | 978-1-6654-9734-3/23/$31.00 ©2023 IEEE | DOI: 10.1109/CCNC51644.2023.10060414

***Abstract*—Mobile communication networks could make a significant difference in rescuing affected people in post-disaster scenarios. However, the existing communication infrastructures tend to be out of service in such scenarios. To solve this issue, Unmanned Aerial Vehicles (UAVs) could be launched as flying base stations to provide the required coverage to Rescue Members (RMs) and allow them to communicate and transmit crucial information through the established links. Meanwhile, with the unpredictable movements of RMs, three serious issues are affecting the deployment of UAVs: (i) the control of their mobility, (ii) their limited energy capacity, and (iii) their restricted communication ranges. Aiming to address these issues, we propose deploying an intelligent connected group of energy-efficient UAVs assisting RMs and providing them communication coverage in the long run. These requirements are satisfied using a deep reinforcement learning strategy to learn the environment dynamics and make good trajectory decisions. Simulation experiments have demonstrated the potential of our framework compared to baseline methods to provide temporary communication networks for emergency response teams during disaster relief missions.**

***Index Terms*—Reinforcement Learning, Disaster relief, UAV, Emergency networks, Trajectory optimization, Coverage.**

I. Introduction

Ground telecommunication infrastructures could be devastated due to large-scale natural disasters, and other unexpected events, such as fires or terrorist attacks [1]. As a consequence, there is often a significant increase in the mortality rate during relief missions, mainly when no connectivity provided during the intervention of Rescue Members (RMs) [2]. To address this crucial issue, Unmanned Aerial Vehicles (UAVs) are seen to be the best option to provide the required coverage to RMs and enhance their mission efficiency [3], [4]. Moreover, UAVs can be quickly deployed anywhere and their movements are adjustable to be closer to the RMs' communications devices, allowing for rapidly establishing a standalone communication system in post-disaster zones. However, some technical problems have disrupted the use of UAVs, such as their limited flight time, trajectory adaptation to the RMs' dynamics, and restricted communications ranges to relay information from RMs to the central controller.

Only a few research studies have investigated the assistance of UAVs to RMs. For instance, in [5], a group of UAVs is launched to monitor, detect, and localize road accidents while efficiently alerting RMs about their positions and the quickest paths to reach them. To cover large affected areas using UAVs, Malandrino *et al.* [6] proposed to deploy multiple UAVs and optimize their trajectories to maintain a certain degree of fairness across the areas to be covered. Similarly, in [7], a reinforcement learning technique was exploited to optimize the UAVs' placement for increasing their coverage over ground users in a large-scale natural disaster. However, as far as we know, none of these solutions or the different UAV-assisted post-disaster contributions has considered the coverage of dynamic RMs and their connectivity to the central controller for situational awareness. Even worse, the connectivity of UAVs and their restricted energy capacity are generally disregarded, particularly when the information needs to be relayed from disaster areas to the central controller. Consequently, these contributions could generate different issues, such as partial coverage, UAV failure, and packet losses during information transmission due to ignorance of the restricted backhaul capacity of UAVs. In this paper, and to overcome these challenges, we propose a Multi-Agent Deep Reinforcement Learning (DRL) Framework called MARLF. Indeed, we deploy multiple UAVs over a post-disaster area to provide near-optimal coverage to RMs on the ground and ease their communication with the central controller. As far as we can tell, this framework is the first such attempt to apply deep reinforcement learning while resolving the several shortcomings identified in the prior schemes.

The rest of this paper is outlined as follows. Section II reports the system model and formulates the problem statement. Section III describes our multi-agent DRL framework. The results' analysis is performed in Section IV. Finally, the paper is concluded in Section V.

II. System Model

Consider a post-disaster relief mission in an urban area where the existing communication infrastructures are entirely damaged. To establish a temporary communication system,

Authorized licensed use limited to: National Yang Ming Chiao Tung University. Downloaded on October 26,2025 at 08:53:03 UTC from IEEE Xplore. Restrictions apply.

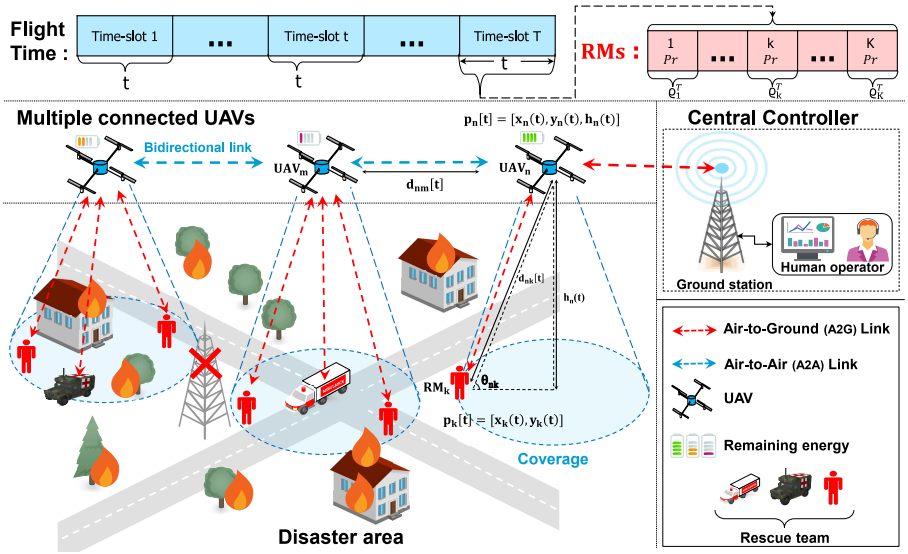

Fig. 1: MARLF application scenario.

a set $\mathcal{N} \triangleq \{n = 1, \ldots, N\}$ of UAVs forming a UAV network and acting as airborne base stations and providing coverage services to K dynamic RMs operate on the field. These RMs are denoted by $\mathcal{K} \triangleq \{k = 1, \ldots, K\}$, each of which is equipped with a wireless interface and continuously communicates with the central controller through UAVs and the Ground Station (GS). For the sake of simplicity, the RMs are supposed to move individually or as a team with random waypoint and reference point group mobility (RPGM) models, respectively. Since UAVs have a restricted communication range, they need to fly around to cover the maximum possible of RMs. The UAVs should ensure a certain level of backhaul capacity with the GS b located at $p_b = [x_b, y_b, h_b]$, where h_b is its height. Moreover, UAVs are supposed to maintain connections with the GS in an energy-efficient way to efficiently relay, in a multi-hop manner, the information received from RMs. It is also assumed that the GS has a real-time vision of the details pertaining to UAVs (*i.e.,* positions and energy levels), which helps it to play the role of a centralized training entity to control the mobility of UAVs (*see* Fig. 1). Our system is studied during T timeslots of duration $t \in \mathcal{T} = \{1, \ldots, T\}$. The energy consumption rate of each UAV$_n$ is mainly due to the propulsion energy that is calculated according to the flying distance, based on the popular model in [8]:

$$Prop(V) = \underbrace{P_b\left(1 + \frac{3V^2}{V_{tip}^2}\right)}_{blade\ profile\ power} + \underbrace{P_i\left(\sqrt{1 + \frac{V^4}{4u_0^2}} - \frac{V^2}{2u_0^2}\right)}_{induced\ power} + \underbrace{\frac{1}{2} f_0 a n S_c V^3}_{parasite\ power} \tag{1}$$

where V and V_{tip} are defined as the UAV's and the rotor blade tip's speed, respectively. P_b and P_i are respectively the induced and the blade profile powers in hovering flight. n and u_0 denote the rotor's solidity and the mean induced velocity, respectively. f_0, S_c, and a are respectively the air density, the rotor disc area, and the fuselage drag ratio. After hovering or horizontally flying, the instantaneous energy consumption of UAV$_n$ may be determined as follows:

$$E_n[t] = \underbrace{\int_0^t Prop(\|v(t)\|)dt}_{energy\ of\ propulsion} \tag{2}$$

where $\|v(t)\|$ denotes the UAV$_n$'s speed. The remaining energy level of UAV$_n$ at time-slot t is calculated as $(E_{max} - \sum_{t=0}^{t} E_n[t])$, where E_{max} is the highest energy level of each UAV. Each UAV$_n$ and RM$_k$ are aware of their own coordinates at each time-slot $t \in \mathcal{T}$, which are respectively denoted by $p_n[t] = [x_n(t), y_n(t), h_n(t)]^T$ and $p_k[t] = [x_k(t), y_k(t)]^T$. The altitude $h_n(t)$ of each UAV$_n$ is restricted, *i.e.,* $h_n(t) \in [h_{min}, h_{max}]$. For the reader's convenience, we give the main abbreviations used in this paper in Table I.

TABLE I: List of abbreviations.

Abbreviation	Description
$d_i^j[t]$	Distance separating nodes i and j at time-slot t
$p_i[t]$	Coordinates of node i at time-slot t
$E_n[t]$	Consumed energy of UAV$_n$ until time-slot t
$R_k^n[t]$	Throughpout from node k to n at time-slot t
$\mathbb{E}[.]$	Expectation under random constraints
$SINR_{kn}^L[t]$	SINR from node k to n in the L link at time-slot m
Z_k^n	allocated bandwidth between nodes k and n
$r_n[t]$	Reward of UAV$_n$ at time-slot t
$o_n[t]$	Observation of UAV$_n$ at time-slot t
$s_n[t]$	State of environment observed by UAV$_n$
$a_n[t]$	Action taken by UAV$_n$ at time-slot t
$Q_n(s_n, a_n)$	Q value after taking action a_n at state s_n
ε	Exploration coefficient

Authorized licensed use limited to: National Yang Ming Chiao Tung University. Downloaded on October 26,2025 at 08:53:03 UTC from IEEE Xplore. Restrictions apply.

A. Channel Link Model

RMs communicate with the GS through Air-to-Air (A2A) and Air-to-Ground (A2G) links, which explain the connections between only UAVs and the connections between UAVs and ground nodes (*i.e.,* GS or RMs), respectively. For this purpose, UAVs should constitute a robust connected aerial backbone to avoid packet losses. In this work, we focus only on the uplink transmission from RMs, whereas the obtained results could be similarly applied to the downlink transmission. Each kind of link is separately defined as follows.

1) A2G Links: According to [9], [10], the links between UAVs and the ground nodes (*i.e.,* GS or RMs) could suffer from higher attenuation in Non-Line-of-Sight (NLoS) than in Line-of-Sight (LoS) due to the diffraction of signals from obstacles and the shadowing effect. The probability of a LoS link between UAV_n and a ground node $m \in \{b, \mathcal{K}\}$ depends on several factors, such as the elevation angle between them and the height of obstacles or rubbles in the disaster area, and therefore, it is calculated as follows:

$$P_{mn}^{\text{LoS}}[t] = \frac{1}{1 + Fexp(-J[\theta_m^n[t] - F])}, \tag{3}$$

where $\theta_m^n[t]$ is the time-varying elevation angle that is given by $\theta_m^n[t] = \frac{180}{\pi}\sin^{-1}\left(\frac{h_n(t)}{d_m^n[t]}\right)$, where $d_m^n[t] = \sqrt{\|p_m[t] - p_n[t]\|^2 + h_n^2(t)}$. F and J are two constant values defined based on the environment where the UAVs are deployed. Consequently, the average path loss from RM_k to UAV_n is given below:

$$G_{mn}^{A2G}[t] = P_{mn}^{\text{LoS}}[t]W_{mn}^{\text{LoS}}[t] + P_{mn}^{\text{NLoS}}[t]W_{mn}^{\text{NLoS}}[t], \tag{4}$$

where $P_{mn}^{\text{NLoS}}[t] = 1 - P_{mn}^{\text{LoS}}[t]$. W_{mn}^{X} denotes the time-varying power gain with $W_{mn}^{\text{X}} = 20\log(d_m^n[t]) + 20\log(f) + 20\log(\frac{4\pi}{c}) + \eta^X$, where $X \in \{LoS, NLoS\}$. f and c are the carrier frequency and the light speed, respectively. η^X is the mean additional loss for $X \in \{LoS, NLoS\}$. To suppose that A2G links are connected under a certain Quality-of-Service, the instantaneous Signal-to-Interference-plus-Noise Ratio (SINR) at the UAV receiver should be larger than a threshold τ_{min}. For simplicity, we suppose that the transmission powers of both terrestrial nodes and UAVs are identical, and they are equal to P_r. Thus, the SINR in the uplink between a terrestrial node $m \in \{b, \mathcal{K}\}$ and UAV_n is given by:

$$SINR_{mn}^{A2G}[t] = \frac{P_r C_k^n[t]}{\sum\limits_{q=1, q\neq k}^{K+b} I_{q,n} + \sigma_{A2G}^2} \geq \tau_{A2G}, \tag{5}$$

where σ_{A2G}^2 is defined as the Gaussian noise and $\sum\limits_{q=1, q\neq k}^{K+b} I_{q,n}$ is the overall interference power at the target destination UAV n from other neighboring ground nodes q. $C_m^n[t] = 1/10^{G_{mn}^{A2G}[t]/10}$ is the channel gain between n and $m \in \{b, \mathcal{K}\}$. In the case when at least two UAVs cover an RM_k, a UAV-RM association's decision should be made. We introduce a binary variable $\text{UR}_k^n \in \{0, 1\}$, where $\text{UR}_k^n = 1$ if RM_k is associated with UAV_n, and $\text{UR}_k^n = 0$ otherwise. It is worthwhile to note that each RM_k should be served only by a single UAV that is providing the highest instantaneous SINR:

$$\text{UR}_k^n[t] = \begin{cases} 1, & n = \text{argmax}_{n\in\mathcal{N}}\{SINR_{kn}^{A2G}[t]\}, \\ 0, & \text{Otherwise.} \end{cases} \tag{6}$$

It should be stressed that UAV_n can simultaneously serve multiple RMs in each time-slot t. Consequently, a Time Division Multiple Access (TDMA) is exploited during the uplink transmission. We divide each time-slot t into K sub-slots, where the k-th subslot has a duration of ϱ_t^k being devoted to a covered RM_k. The two following constraints should be satisfied for the uplink transmission:

$$\sum_{k=1}^{K} \Gamma_{k,n}^t[k] \leq 1, \quad \forall t \in \mathcal{T}, \forall n \in \mathcal{N}, \tag{7a}$$

$$\sum_{n=1}^{N} \Gamma_{k,n}^t[k] \leq 1, \quad \forall k \in \mathcal{K}, \forall t \in \mathcal{T}, \tag{7b}$$

where $\Gamma_{k,n}^t[k] \in \{0, 1\}$ indicating that UAV_n is connected to RM_k at sub-slot k if $\Gamma_{k,n}^t[k] = 1$, and 0 otherwise. The constraints (7a) and (7b) assume that each dispatched UAV_n only serves one RM_k and each RM_k is scheduled by at most one UAV_n. If the allocated bandwidth between RM_k and UAV_n is Z_k^n, then the instantaneous rate between UAV_n and RM_k is given by:

$$R_k^n[t] = \text{UR}_k^n[t]\Gamma_{k,n}^t[k]Z_k^n \log_2\left(1 + SINR_{kn}^{A2G}[t]\right), \tag{8}$$

To extend the coverage of the UAV network, it is required to define which UAV_n could connect the whole UAV network to the GS b. We introduce another binary variable $\text{UB}_n^b \in \{0, 1\}$, where $\text{UB}_n^b = 1$ if the GS b is associated with UAV_n, and $\text{UB}_n^b = 0$ otherwise. As shown in Fig. 1 and to provide significant coverage of the area, we suppose that the GS b will connect only with a single UAV_n providing the highest instantaneous data rate as follows:

$$\text{UB}_n^b[t] = \begin{cases} 1, & n = \text{argmax}_{n\in\mathcal{N}}\{SINR_{bn}^{A2G}[t]\}, \\ 0, & \text{Otherwise.} \end{cases} \tag{9}$$

Consequently, the instantaneous data rate of the A2B link between UAV_n and the GS is given by:

$$R_n^b[t] = \text{UB}_n^b[t]Z_n^b \log_2\left(1 + SINR_{bn}^{A2G}[t]\right), \tag{10}$$

2) A2A Links: Since there are no reflections or obstacles in the air, the A2A channel is generally dominated by free space LoS propagation. According to [11], the path loss between any pairs of UAV_i and UAV_j, where $i, j \in \mathcal{N}$, is expressed as follows.

$$G_{ij}^{A2A}[t] = 10\eta_{A2A}^{LoS}\log_{10}\left(\frac{4\pi f_{A2A} d_i^j[t]}{c}\right) + \delta_{A2A} \tag{11}$$

where f_{A2A} and δ_{A2A} are the carrier wavelength for the A2A channel and the attenuation term, respectively. In this situation, the instantaneous SINR between UAV_i and UAV_j is calculated as follows:

$$SINR_{ij}^{A2A}[t] = \frac{P_r C_i^j[t]}{\sum\limits_{q=1, q\neq i}^{N} I_{q,j} + \sigma_{A2A}^2}, \tag{12}$$

Authorized licensed use limited to: National Yang Ming Chiao Tung University. Downloaded on October 26,2025 at 08:53:03 UTC from IEEE Xplore. Restrictions apply.

where $C_i^j[t] = \frac{1}{G_{ij}^{A2A}[t]}$. Each pair of UAV$_i$ and UAV$_j$, $\forall i, j \in \mathcal{N}$ is assumed to be connected if, and only if $SINR_{ij}^{A2A}[t] \geq SINR_{bn}^{A2G}[t]$, where UAV$_n$ is the one that connects the UAV network to the GS b. This assumption should be always verified to establish a robust connected aerial backbone ensuring an efficient relay of information from RMs to the central controller under the same throughput provided by the A2G link. To measure the connectivity of the UAV network to the GS, the latter can define the status of each UAV-to-UAV and UAV-to-BS links using a symmetric matrix $C = [C_{i,j}]_{N+1 \times N+1}$, where $C_{i,j} = 1$ denotes that the pair of nodes i and j are connected, otherwise, $C_{i,j} = 0$. To get the direct or multihop connectivity status $Con_n[t]$ of a given UAV$_n$ to GS b at slot t, the Breadth-First Search (BFS) [12] is adopted. The detailed process is formulated in Algorithm 1.

Algorithm 1: Aerial network connectivity

input : $\mathcal{N}$.
output: C, Con
begin
  for $\forall i, j \in \mathcal{N} \cup b$ **do**
    if $SINR_{ij}^{A2A}[t] \geq \tau_{A2G}$ **then**
      $C_{i,j} \leftarrow 1$
    else
      $C_{i,j} \leftarrow 0$
  $Con_n[t] \leftarrow 1$
  if $\exists b \in GS$ ***and*** $E_{max} - \sum_{t=1}^{t} E_n[t] > 0$ **then**
    $path(n, b) \leftarrow$BFS(n, b)
    if *Not* $path(n, b)$ **then**
      $Con_n[t] \leftarrow 0$ and break
    else
      Continue

B. Problem Statement

To provide an energy-efficient coverage for RMs and keep them connected to the GS, UAV movements are dynamically adjusted. This trajectory optimization could significantly maximize the average throughput of RMs while considering their random mobility constraint. For simplicity, let $P_N = \{p_n[t], \forall n \in \mathcal{N}\}$ be the instantaneous positions of UAVs. The following is how we formulate our optimization problem:

$$\max_{P_N} \quad \mathbb{E}\left[\frac{\sum_{n=1}^{N}\sum_{k=1}^{K}\sum_{t=1}^{T} R_k^n[t]}{1+\left(\sum_{n=1}^{N}\sum_{t=1}^{T} E_n[t]\right)}\right]$$

$$\begin{aligned}
\text{s.t.} \quad & \textbf{C1:} && (E_{max} - \sum_{t=1}^{t} E_n[t]) > 0 && \forall n \in \mathcal{N}, \forall t \in \mathcal{T} \\
& \textbf{C2:} && \sum_{k=1}^{K} \Gamma_{k,n}^t[k] \leq 1, && \forall n \in \mathcal{N}, \forall t \in \mathcal{T} \\
& \textbf{C3:} && \sum_{n=1}^{N} \Gamma_{k,n}^t[k] \leq 1, && \forall k \in \mathcal{K}, \forall t \in \mathcal{T} \\
& \textbf{C4:} && \sum_{n=1}^{N}\sum_{k=1}^{K} R_k^n[t] \leq \sum_{n=1}^{N} R_n^b[t], && \forall t \in \mathcal{T} \\
& \textbf{C5:} && \sum_{n=1}^{N} \text{UB}_n^b[t] \geq 1 && \forall t \in \mathcal{T} \\
& \textbf{C6:} && \exists n \leq N+1, (C^{n+1})_{i,j} \neq 0 && \forall i \in \mathcal{N}, j \in b
\end{aligned} \tag{13}$$

where **C1** ensures that the consumed energy of UAV$_n$ stays within the limit of its energy capacity during the entire mission. **C2** and **C3** denote that each RM$_k$ can be served by at most one UAV$_n$ that in turn can serve at most one RM$_k$ at the k-th sub-slot of time-slot t. **C4** indicates that the average backhaul capacity of the UAV network cannot be exceeded by the total average data rate that it may receive from its connected RMs. **C5** guarantees that the UAV network will always be connected to the GS. **C6** satisfies that any pair of UAVs has at least one routing channel.

III. Multi-Agent DRL Framework: MARLF

Since (13) is a non-convex mixed-integer optimization problem with a lack of knowledge of RMs' mobility, a suitable method is to leverage a multi-agent Deep Deterministic Policy Gradient (DDPG) model [13] to find a near-optimal solution for (13). To solve the problem (13), we select algorithm , which is a combination of deep Q network and actor-critic algorithms. DDPG allows learning the dynamics of RMs while continuously controlling UAVs' flight, coverage, energy consumption, and connectedness. As depicted in Fig. 2, at each time-slot t, each agent $n \in \mathcal{N}$ checks the environment's state $o_n[t]$, takes an action $a_n[t]$ in accordance with the policy $\pi^n(o_n[t]|\psi^{\pi^n})$, receives a reward $r_n[t]$, and updates the environment state $s_n[t+1]$. It should be stressed that each agent n upholds an actor neural network $\pi^n(o_n^t|\psi^{\pi^n})$ and a critic neural network $Q^n(s_n[t], a_n[t]|\psi^{Q^n})$, where ψ^{π^n} and ψ^{Q^n} are their parameters, respectively.

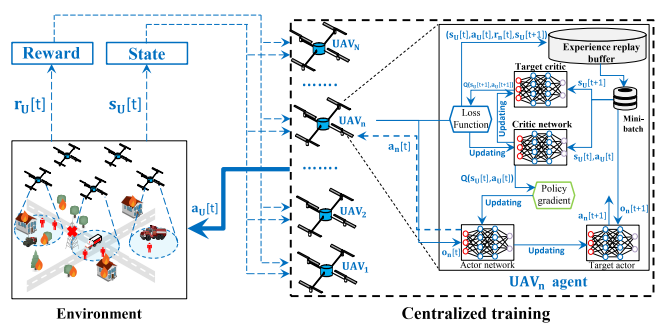

Fig. 2: MADDPG framework for MARLF.

A. State space

The environment observation by each agent consists of the locations of UAVs, and the data rates and positions of RMs. We also include the availability status of each UAV$_n$, which is denoted as binary variable ν_n (*i.e.,* $\nu_n[t] = 1$ if $(E_{max} - \sum_{t=1}^{t} E_n[t] \geq 0)$, $\nu_n[t] = 0$ otherwise). Formally, the observation $o_n[t]$ of UAV$_n$ would be $o_n[t] = [p_1[t], \ldots, p_N[t], p_1[t], \ldots, p_K[t], R_1^n[t], \ldots, R_K^n[t], \nu_n[t]]$ with a cardinality of $(N + 2 * K + 1)$.

B. Action space

At each time-slot t, each agent n takes an action $a_n[t]$, which is defined by three parts: (i) the altitude $h_n(t) \in$

Authorized licensed use limited to: National Yang Ming Chiao Tung University. Downloaded on October 26,2025 at 08:53:03 UTC from IEEE Xplore. Restrictions apply.

$[h_{min}, h_{max}]$, (ii) the distance traveled $d_n[t] \in [0, d_{max}]$, where 0 is the hovering state, and (iii) the flying direction $\phi_n[t] \in [0, 2\pi[$.

C. Reward and penalties

The objective of MARLF is to increase the number of covered RMs along with their respective data rates while reducing the energy consumption of each UAV$_n$, maintaining the connectivity of the whole UAV network, and maintaining its backhaul connectedness with the GS b. For this purpose, the total rewards should be maximized by maximizing each agent n's reward that is given by:

$$r_n[t] = \left(\frac{\sum_{n=1}^{N} UB_n^b[t] \sum_{k=1}^{K} R_k^n[t]}{\sum_{t=1}^{t} E_n[t]} \right) (\nu_n[t] \times con_n[t]) - \sum_{p=1}^{3} P_n^p[t] \tag{14}$$

where three penalties $P_n^1[t]$, $P_n^2[t]$, and $P_n^3[t]$ of Υ_1, Υ_2, and Υ_3, respectively, could be incurred whenever $a_n[t]$ would result in exceeding the backhaul capacity, *i.e.,* $\sum_{n=1}^{N} \sum_{k=1}^{K} R_k^n[t] > \sum_{n=1}^{N} R_n^b[t]$, flying beyond the target destination, or colliding with another UAV, respectively. The values of Υ_1, Υ_2, and Υ_3 can be manually set depending on the severity of the penalty.

D. MARLF ALgorithm

Our reinforcement learning algorithm MARLF is presented in Algorithm 2. The training of MARLF is performed for EPS episodes, each of which accounts for T steps. In the training phase, a random or optimal action $a_n[t]$ is selected with ε or $1 - \varepsilon$ probabilities, respectively. In line 17, a replay buffer $\mathcal{B}_n$ is used to store the tuples $(s_U[t], a_U[t], r_n[t], s_U[t+1])$ to interrupt temporal correlations, where $s_U[t] = \{o_n[t], \forall n\mathcal{N}\}$ and $a_U = \{a_n[t], \forall n\mathcal{N}\}$. Then, to perform the learning phase, a set of data is randomly extracted from $\mathcal{B}_n$ (*see* Line 18). In line 21, the value network is updated by decreasing the mean-squared loss between the original value and the updated Q value [14]. To avoid divergence of MARLF, the weights $\psi^{Q^{n'}}$ and $\psi^{\pi^{n'}}$ are gradually updated using the parameter $\chi = 0.001$ (*see* Lines 25 and 26).

Algorithm 2: MARLF Algorithm.

1 **begin**
2 Initialization of Buffer $\mathcal{B}_n$ of capacity B (i.e., $\mathcal{B}_n = \emptyset$);
3 Randomly initializing of Actor network $\pi^n(.)$ and critic network $Q^n(.)$ with their respective weights ψ^{π^n} and ψ^{Q^n};
4 Target networks $\pi^{n'}(.)$ and $Q^{n'}(.)$ are initialized with their respective weights $\psi^{\pi^{n'}} \leftarrow \psi^{\pi^n}$ and $\psi^{Q^{n'}} \leftarrow \psi^{Q^n}$;
6 **for** $Episode \leftarrow 1, \ldots, EPS$ **do**
7 Receive first observation $o_n[1], n \in \mathcal{N}$;
9 **for** $t \leftarrow 1, \ldots, T$ **do**
10 $a_n[t] = \pi^n(o_n[t]|\psi^{\pi^n}) + \varepsilon$;
11 **Execute**: action $a_n[t] = [\phi_n[t], d_n[t], h_n(t)]$, $n \in \mathcal{N}$;
13 **if** $\sum_{p=1}^{3} P_n^p[t] > 0$ **then**
14 Cancel action $a_n[t]$ and update $s_U[t+1]$;
15 **Evaluate**: obtain reward $r_n[t]$ based on (14);
16 **Observe**: get an updated state $s_U[t+1]$;
17 Record tuples $(s_U[t], a_U[t], r_n[t], s_U[t+1])$ into buffer $\mathcal{B}_n$;
18 Sample a random batch of Ω transitions $(s_U^\omega, a_U^\omega, r_n^\omega, s_U^{\omega+1})$;
19 $TV_\omega^n = r_n^\omega + \zeta Q^{n'}(s_U^{\omega+1}, \pi^{n'}(s_U^{\omega+1}|\psi^{\pi^{n'}})|\psi^{Q^{n'}})$;
20 Update weight ψ^{Q^n} of $Q^n(.)$ by minimizing the loss:
21 $Loss(\psi^{Q^n}) = \frac{1}{\Omega} \sum_{\omega=1}^{\Omega} (TV_\omega^n - Q^n(s_U^\omega, a_U^\omega|\psi^{Q^n}))^2$;
22 Update weight ψ^{π^n} of $\pi^n(.)$ by:$\nabla_{\psi^{\pi^n}} J(\psi^{\pi^n}) \approx$
23 $\frac{1}{\Omega} \sum_{\omega=1}^{\Omega} \nabla_{\psi^{\pi^n}} \pi^n(o_n[t]|\psi^{\pi^n}) \nabla_{a_n[t]}$
24 $\times Q^n(s_U[t], a_U[t]|\psi^{Q^n})|$
25 Update the corresponding target network weights:
26 $\psi^{Q^{n'}} = \chi\psi^{Q^n} + (1-\chi)\psi^{Q^{n'}}$;
27 $\psi^{\pi^{n'}} = \chi\psi^{\pi^n} + (1-\chi)\psi^{\pi^{n'}}$;

IV. Performance Analysis

To show the performance of MARLF, a series of simulations is performed using TensorFlow 2.0.0 and Python 3.8. We consider a rectangular area of 2×2 km^2 consisting of 20 RMs distributed uniformly over the area and equipped with communication devices with an uplink transmission power $P_r = -20dBm$. We deploy 7 UAVs, each of which has an altitude of $h_n(t) \in [60, 100]$ and is controlled by its respective agent. The performance of MARL is compared with other Reinforcement Learning (RL) methods (*i.e.,* multi-agent Deep Q network (MA-DQN) and the single agent-based framework of [7]) is conducted over 1000 episodes, each having 100 time-steps. In the testing phase, MARLF's performances are also compared with baseline methods: (i) Random selects random movements of UAVs at each time step and (ii) Greedy selects movements according to the greedy policy. To see the convergence of the obtained rewards, in Fig. 3, we plotted the rewards' sum gotten by all agents at each episode. After 300 training episodes, it is seen that the rewards converge to their maximum levels. This is explained by the fact that MARLF successfully learned to adapt each set of movements to cover the dynamic RMs.

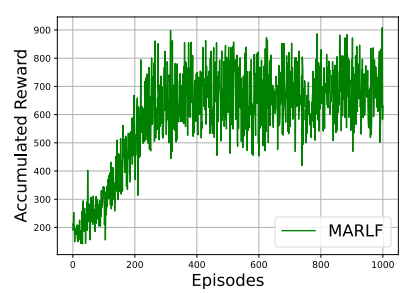

Fig. 3: Rewards per each episode in MARLF.

From Fig. 4(a), we could extract two different remarks: (i) the rewards in the first 100 episodes are unstable and tend to decrease sometimes, and (ii) the rewards behave increasingly in the remaining episodes. These are due to

Authorized licensed use limited to: National Yang Ming Chiao Tung University. Downloaded on October 26,2025 at 08:53:03 UTC from IEEE Xplore. Restrictions apply.

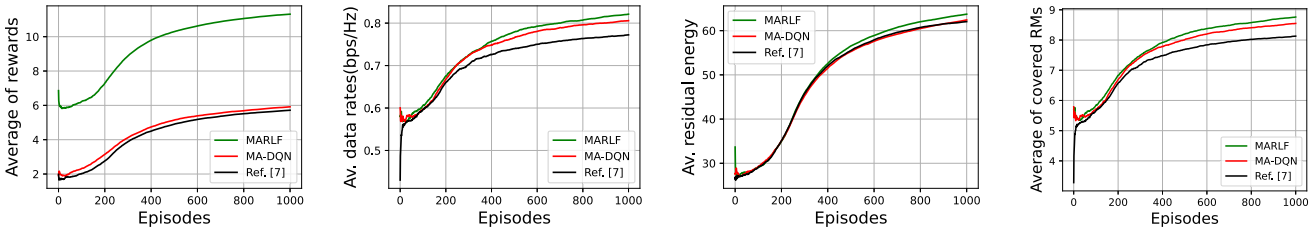

(a) Accumulated reward. (b) Average of data rates. (c) Residual energy of UAVs (%). (d) Average of covered RMs.

Fig. 4: Simulation results (Nb. of RMs=20 and Nb. of UAVs=7).

both the exploration phase, where UAVs try to discover the dynamics of the environment by making random movements, and the exploitation phase, where the actions of UAVs are synchronized to cover the maximum possible of RMs, respectively. In Fig. 4(b), we observe that the average data rates quickly increase until they are comparatively stable. This is because more and more RMs are covered each time by UAVs. Fig. 4(c) shows a significant increase in the residual energy rate of UAVs, which demonstrates again the trajectory optimization of UAVs that take actions only where it is required. Finally, in Fig. 4(d), MARLF achieves the best performance in terms RMs' coverage because MARLF has built an optimal policy to ensure that RMs are fully covered.

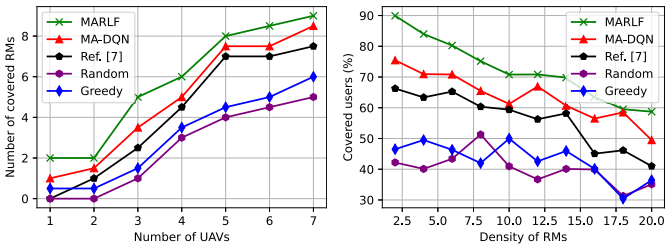

(a) Covered RMs vs. UAVs. (b) Average coverage (%).

Fig. 5: Testing phase.

Fig. 5(a) shows that by using MARLF, the number of covered RMs significantly increases with the increase of UAVs compared with other DRL and baseline methods. This is because UAVs try to cover more RMs within the flight time. Fig. 5(b) indicates that MARLF with only 7 UAVs can consistently achieve up to 10% gain in terms of covered RMs' rate compared to the other RL and baseline methods. This is because our strategy tends to provide accurate actions more quickly to cover RMs.

V. Conclusion

We proposed an energy-efficient trajectory optimization of UAVs to provide long-term coverage for dynamic RMs in post-disaster scenarios. Using a DDPG-based approach, UAVs calculate their optimal energy-efficient movements for covering the maximum number of RMs, maintaining their connectivity with each other and the GS, and maximizing the throughput of RMs. Compared with baseline methods, MARLF has effectively adapted to the environment's dynamic, and the results have demonstrated this claim in terms of throughput, energy consumption, and the average number of covered users. In future work, we will be more careful to address the energy consumption of RMs and the downlink transmission while taking into account other physical parameters.

References

[1] B. Alzahrani, O. S. Oubbati, A. Barnawi, M. Atiquzzaman, and D. Alghazzawi, "UAV assistance paradigm: State-of-the-art in applications and challenges," *Journal of Network and Computer Applications*, vol. 166, p. 102706, 2020.

[2] A. Trotta, L. Montecchiari, M. Di Felice, and L. Bononi, "A GPS-free flocking model for aerial mesh deployments in disaster-recovery scenarios," *IEEE Access*, vol. 8, pp. 91 558–91 573, 2020.

[3] Y. Wang, W. Chen, T. H. Luan, Z. Su, Q. Xu, R. Li, and N. Chen, "Task Offloading for Post-Disaster Rescue in Unmanned Aerial Vehicles Networks," *IEEE/ACM Transactions on Networking*, 2022.

[4] X. Liu, Z. Li, N. Zhao, W. Meng, G. Gui, Y. Chen, and F. Adachi, "Transceiver design and multihop D2D for UAV IoT coverage in disasters," *IEEE Internet of Things Journal*, vol. 6, no. 2, pp. 1803–1815, 2018.

[5] O. S. Oubbati, A. Lakas, P. Lorenz, M. Atiquzzaman, and A. Jamalipour, "Leveraging communicating UAVs for emergency vehicle guidance in urban areas," *IEEE Transactions on Emerging Topics in Computing*, vol. 9, no. 2, pp. 1070–1082, 2019.

[6] F. Malandrino, C.-F. Chiasserini, C. Casetti, L. Chiaraviglio, and A. Senacheribbe, "Planning UAV activities for efficient user coverage in disaster areas," *Ad Hoc Networks*, vol. 89, pp. 177–185, 2019.

[7] P. V. Klaine, J. P. Nadas, R. D. Souza, and M. A. Imran, "Distributed drone base station positioning for emergency cellular networks using reinforcement learning," *Cognitive computation*, vol. 10, no. 5, pp. 790–804, 2018.

[8] Y. Zeng, J. Xu, and R. Zhang, "Energy minimization for wireless communication with rotary-wing UAV," *IEEE Transactions on Wireless Communications*, vol. 18, no. 4, pp. 2329–2345, 2019.

[9] M. Mozaffari, W. Saad, M. Bennis, and M. Debbah, "Unmanned aerial vehicle with underlaid device-to-device communications: Performance and tradeoffs," *IEEE Transactions on Wireless Communications*, vol. 15, no. 6, pp. 3949–3963, 2016.

[10] A. Al-Hourani, S. Kandeepan, and A. Jamalipour, "Modeling air-to-ground path loss for low altitude platforms in urban environments," in *Proceedings of the IEEE global communications conference*. IEEE, 2014, pp. 2898–2904.

[11] O. S. Oubbati, M. Atiquzzaman, A. Baz, H. Alhakami, and J. Ben-Othman, "Dispatch of UAVs for Urban Vehicular Networks: A Deep Reinforcement Learning Approach," *IEEE Transactions on Vehicular Technology*, 2021.

[12] M. Weik, *Computer science and communications dictionary*. Springer Science & Business Media, 2000.

[13] T. P. Lillicrap, J. J. Hunt, A. Pritzel, N. Heess, T. Erez, Y. Tassa, D. Silver, and D. Wierstra, "Continuous control with deep reinforcement learning," *arXiv preprint arXiv:1509.02971*, 2015.

[14] H. Van Hasselt, A. Guez, and D. Silver, "Deep reinforcement learning with double Q-learning," in *Proceedings of the AAAI conference on artificial intelligence*, vol. 30, no. 1, 2016.

Authorized licensed use limited to: National Yang Ming Chiao Tung University. Downloaded on October 26,2025 at 08:53:03 UTC from IEEE Xplore. Restrictions apply.