Project Proposal: FM Radio Explorer

Jacob Feenstra and Chun-Ho Chen

I. Description

Historically, FM radio provided a dominating medium to organically explore music, curated by the on-air disc jockey. Radio has not enjoyed the popularity it has in the past, with many music listeners opting for streaming services for their discovery. What if we could have the best of both worlds? Introducing our FM Radio Explorer, we devise an embedded system that provides radio tuning capabilities, in addition to providing exploratory information on the current track, all from the same interface.

At a high level, we will use LastFM's public-facing API to query the song & artist name from the FM playback (using the CC3200's WiFi Card). LastFM offers a wide variety of meta-data and points of musical exploration, which will be discussed with higher granularity in Section III. The S10-S3 Univeral Remote and IR Receiver, along with Lab 3's send-receive multi-tap texting, will write to the Digital Signal Processing (DSP) radio module and play a selected FM broadband (for example, 90.3 would correlate to 90.3 FM). An antenna will be utilized to provide greater signal gain, and a peripheral speaker will translate the FM radio to coherent audio. Our system will enable a user to switch between different FM radios seamlessly, and relevant information pulled from LastFM will be indicated on the Adafruit OLED in different views, which the user will be able to interact with. Note all of this will be orchestrated with our Texas Instrument's CC3200 LaunchPad.

II. Design

A. Functional Specification

Fig. 1. State Diagram

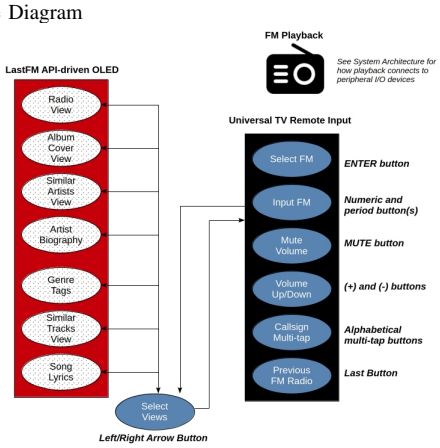

As indicated above, the functional specification[1] mainly revolves around two main categories: the use of the universal remote and the OLED display. All of the other technical details are hardware-specific (system architecture), or abstracted away from the user.

1) Universal Remote: A set of buttons are configured for the user to control the FM playback, as well as the current display on the OLED. Planned input involves:
   a) Mute button: Mute and unmute the FM playback
   b) Plus Button (VOL): Raise the volume of the FM playback to a pre-defined threshold. Specifically applies to left volume button on remote.
   c) Minus button (VOL): Lower the volume of the FM playback until it is no longer audible. Specifically applies to left volume button on remote.
   d) Numerical multi-tap buttons: Use the numerical buttons to specify the FM radio frequency. Buttons 0-9 map to these numbers. Will leverage the Lab 3 multi-tap algorithm with some modifications to allow for punctuation and alphabetical symbols, with the puncutation (such as a period) being reserved for the Button 1 multi-tap. For instance, to tune into 90.3 FM (our local college radio!), you would type in "90.3", tapping the 0 button twice for the period.
   e) Enter button: Pressing this button will send the currently typed input (as described in d) to be queried against the radio module. If it matches with an FM broadband, that broadband will played! Any erroneous or unrecognized input will prompt the user to try again.
   f) Delete button: Delete the last character entered while input is pending. Note this is a nice to have, and if our Delete button is not working (something which occurred in Lab 3), we will simply opt for the user to recycle the input by pressing enter.
   g) Last button: Playback the last FM radio signal visited.
   h) Left Arrow: Navigate to an OLED view to the left. Each view will be accessible from a "banner menu" at the top of the OLED, not dissimilar to traditional graphical interfaces in software. Clicking the left arrow will "switch" to another view, which will refresh the entire OLED display and highlight the relevant entry on the banner. If at the end of the banner, left-clicking cycles to the rightmost entry in the banner.
   i) Right arrow: Similar functionality to the left arrow, but for the entry to the right of the current entry. If at the rightmost entry in the banner, right-clicking cycles to the leftmost entry in the banner.
2) OLED Display: What is presented on the OLED display,

[1] We assume the functional specification mainly relates to the UI/UX, and details relevant to user interaction.

and navigable by the left and right arrows on the remote. Relevant information to currently playing song an artist.

a) Radio view: Shows the current FM radio song playing, current song playing, the artist, and track progression.
b) Album cover view: Shows a 128x128 JPEG image of the album cover of the song currently playing
c) Similar artists view: Shows a list of similar artists (compared against the artist currently playing).
d) Artist Biography: Shows biography of the artist currently playing
e) Genre tags: Indicates genres of the current song playing.
f) Similar tracks: Shows songs similar to the song currently playing.
g) Song lyrics: If queryable through musixmatch (a lyrics database used by Spotify, LastFM, and more), shows the lyrics of the song playing (not time-synced). Otherwise, indicates that lyrics are not currently available.

B. System Architecture

Fig. 2. Architectural Diagram

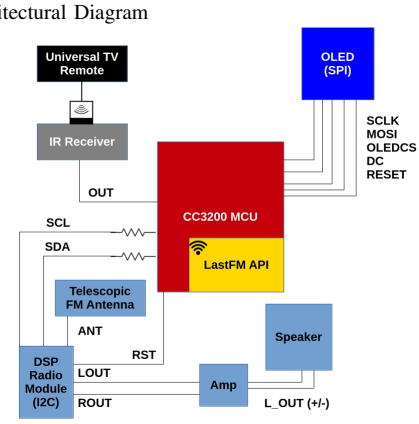

Using a Digital Signal Processing (DSP) Radio Module with an antenna, we can reliably pick up on FM radiowaves. The DSP uses I2C to send carrier information to the microcontroller. Namely, we are interested in the Radio Data System (RDS), which encodes information in the FM signal, namely the song title and playing artist.

The DSP also manages an analog path to the amplifier and speaker assembly over I2C. Any signals sent to the DSP (mute, volume up, volume down, etc) will be interpreted by the DSP and sent to the speaker. The amplifier boosts the gain on our speaker. An FM antenna will be attached to ensure clear FM signal inference.

DSP's I2C also relays the RDS metadata, which will be inputted to the LastFM API. HTTP GET responses will fetch relevant song & artist information from the website. Thus this I2C SDA will both provide *and* receive data (provide LastFM input, receive requests to manipulate speaker volume). The DSP will also need two 4.7 kiloOhm resistors on it's I2C lines to ensure reliable response.

The Universal Remote and IR Receiver components are identical to Lab 3, but we will modify the multi-tap text algorithm further to meet the specifications indicated in Section II-A. With these specifications, we can control the views on the OLED display, which will be populated by GET responses from the LastFM API.

III. Implementation Goals

A. Minimal

1) Implemented DSP radio module with speaker
2) Queryable RDS which displays currently playing song on OLED Display (this single view is our most minimal prototype)
3) Extended multi-tap remote/IR module to reliably target different FM signals.
4) Working LastFM API with an interface to C for various HTTP GET request/responses.

B. Target

1) Complete, UI/UX friendly radio view: includes song and artist information, current progression in song, signal strength of FM radio, radio currently playing (with it's callsign).
2) Album cover view: full 128x128 JPEG of relevant album cover for currently playing song. Color mapped, and using the TJpgDec JPEG library to accomodate for the CC3200's smaller RAM (loading the image line-by-line). The trickiest part of our software suite.
3) Similar artists view: List of artists similar to the one currently playing.
4) Artist biography view: Print out artist biography on OLED, make sure it is scrollable
5) Genre tags: List relevant genres for the currently playing song.
6) Similar tracks: List similar tracks for the currently playing song.
7) Song lyrics: List song lyrics (if available through Musixmatch) for the currently playing song
8) Remote functionality: volume up/down functionality, Mute functionality, playback last FM radio.

C. Stretch

1) Interactive recommender system: Click on a recommended artist to view their artist bio, and top tracks. Click on a recommended track to see it's genre tags, and what it's recommended tracks are.
2) Complete FM History: Allow for a complete history of the FM radio's visited thus far, and allow the user to click and visit a previous one. For an *extra* stretch goal, allow the user to view what they heard on this FM radio. An even further stretch goal would be to persist this information across runtimes of the system.
3) Channel tuning: Use the channel/paging minus and plus buttons on the remote to flip between FM radio signals reliably. Would require a consistent step-size and bounds check algorithm.

IV. Bill of Materials

Surprisingly, the materials come out pretty cheap! We even doubled up on certain materials to ensure we can both test our microcontrollers separately, and have extras in case of duds.

1) FM Antenna (2x, $7.99): using a POBADY Telescopic with SMA connector 73.5 cm model available on Amazon.
2) Speaker (4x, $5.49): using a YXQ 32mm 1W 8 Ohm round metal shell model available on Amazon.
3) DSP Radio Module (4x, $8.89): using a Create Idea RDA5807M FM Stereo Receiver available on Amazon.
4) Stereo Amplifier (3x, $4.75): using a VKLSVAN PAM8403 Module Digital Power Amplifier Board (Class D), available on Amazon.
5) Universal Remote (2x, provided by EEC 172)
6) IR Receiver (2x, provided by EEC 172)
7) CC3200 MCU (2x, provided by EEC 172)
8) Adafruit SSD1351 OLED Display (2x, provided by EEC 172)
9) 3 resistors, 1 capacitor (should be provided in EEC 172 lab)

Total costs come out to $27.12.