Restriction Orifice [RO] Sizing – SRK EoS and ISO 5167-2

Jayanthi Vijay Sarathy, M.E, CEng, MIChemE, Chartered Chemical Engineer, IChemE, UK

Restriction Orifices [RO] are specialized non-moving plate devices inserted into piping to permanently reduce fluid pressure, restrict flow rates, and/or minimize noise/vibrations. Their key application in the oil and gas industry lies in reducing pressure to protect downstream equipment from excessive pressure, regulating flow to other units such as the flare stack, controlling pump minimum flows and enabling safe depressurization. Restriction orifices can be single stage or multistage. In the current undertaking, a single stage orifice is considered and the fluid properties are evaluated using Soave-Redlich-Kwong (SRK) Equation of State (EoS) and ISO 5167-2:2003 standard.

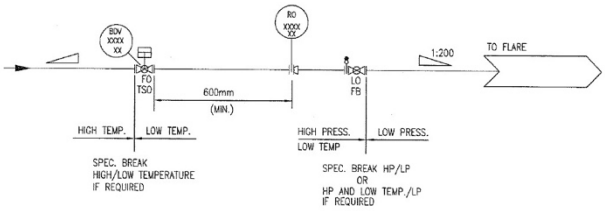

Figure 1. Blowdown line with RO arrangement [1]

General Notes

1. Although ISO 5167-2 is written primarily for flow measurement for high accuracy, it is also applicable for pure pressure reduction applications to ensure more predictable behaviour in high ΔP and multiphase flow applications.
2. Unlike general orifice sizing methods, ISO 5167-2 takes into consideration a more rigorous discharge coefficient [C] and expansion factor [ε] estimation. As a result, the discharge coefficient [C] can be lower than 0.6 also. The ISO sizing method is applicable for a beta [β] of 0.2 ≤ β ≤ 0.75
3. In the current undertaking, for single stage orifice, the orifice type chosen is a standard sharp edged orifice.

Methodology – SRK EoS

To estimate properties of the hydrocarbon mixture, the Soave-Redlich-Kwong (SRK) Equation of State (EoS) can be expressed as,

$$P = \frac{RT}{[V_m - b_m]} + \frac{a_m}{V_m[V_m + b_m]} \quad (1)$$

Where,

P = Pressure [bar(a)]

R = Gas Constant = 0.08314 [m³.bar/kmol.K]

T = Temperature [K]

a_m = Mixture attraction parameter [m⁶.bar/kmol²]

b_m = Mixture co-volume parameter [m³/kmol]

v_m = Mixture molar volume [m³/kmol]

To estimate the values of a_m and b_m of the mixture, Van der Waals mixing rules can be considered as follows,

$$a_m = \sum_i \sum_j x_i x_j a_{ij} \quad (2)$$

$$a_m = \sum_i \sum_j x_i x_j \times \sqrt{a_i a_j} \times (1 - k_{ij}) \quad (3)$$

$$b_m = \sum_i x_i b_i \quad (4)$$

Where,

$$a_i = a_j = \frac{0.42474 \times R^2 \times T_{c,i}^2}{P_{c,i}} \times \alpha_i(T) \quad (5)$$

$$b_i = b_j = \frac{0.08664 \times R \times T_{c,i}}{P_{c,i}} \quad (6)$$

$$x_i = x_j \quad (7)$$

$$\alpha_i(T) = \left[1 + \left[m_i\left(1 - \sqrt{T_{r,i}}\right)\right]\right]^2 \quad (8)$$

$$m_i = 0.48505 + 1.55171\omega_i - 0.15613\omega_i^2 \quad (9)$$

The binary interaction parameters [BIP] [k_{ij}] are calculated based on Cheu-Prausnitz (1967) correlation using critical volume [V_c] values for non-polar pairs as follows,

$$k_{ij} = 1 - \left[\frac{2[V_{c,i}V_{c,j}]^{1/6}}{\left[V_{c,i}^{1/3} + V_{c,j}^{1/3}\right]}\right]^3 \quad (10)$$

$x_i = x_j$ = Mole fractions [mol frac]

$P_{c,i}$ = Critical Pressure [bara]

$T_{c,i}$ = Critical Temperature [K]

$V_{c,i} = V_{c,j}$ = Critical Volume [m³/kmol]

k_{ij} = Binary Interaction Parameter [-]

ω = Acentric Factor [-]

$\alpha_i(T)$ = Graboski and Daubert formulation [-]

Based on the above expressions, the molar volume of the mixture [V_m] can be calculated iteratively as,

$$P - \frac{RT}{[V_m - b_m]} - \frac{a_m}{V_m[V_m + b_m]} = 0 \quad (11)$$

The mixture density [ρ] is computed as,

$$\rho = \frac{MW_m}{V_m} \quad (12)$$

Where,

ρ = mixture density [kg/m³]

MW_m = Mixture molecular weight [kg/kmol]

To estimate the compressibility factor of the mixture, the cubic form is,

$$Z^3 - Z^2 + [A - B - B^2]Z - AB \quad (13)$$

$$A = \frac{a_m P}{R^2 T^2} \quad (14)$$

$$B = \frac{b_m P}{RT} \quad (15)$$

To identify the phases, the largest positive root represents the vapour phase compressibility factor, and the smallest positive root represents the liquid phase compressibility factor. Two phase if two positive roots.

The molar enthalpy can be calculated using the residual properties as follows,

$$H_m = H_{ideal} + \int_{T_{ref}}^{T} C_{p,m} dT + H^R \quad (16)$$

Where,

$$H_{ideal} = \sum x_i H_{ideal,i} \quad (17)$$

$$\int_{T_{ref}}^{T} C_{p,m} dT = \left[\sum x_i C_{p,i}\right] \times \left(T - T_{ref}\right) \quad (18)$$

$$H^R = RT[Z-1] + \left[\frac{T\left(\frac{da}{dT}\right) - a_m}{b_m} \times ln\left[\frac{Z+B}{Z}\right]\right] \quad (19)$$

$$\frac{da}{dT} = \sum_i \sum_j \frac{x_i x_j \times \sqrt{a_i a_j} \times \left(1 - k_{ij}\right)}{2} \left[\frac{d\alpha_i}{dT} + \frac{d\alpha_j}{dT}\right] \quad (20)$$

$$\frac{d\alpha_i}{dT} = \frac{d\alpha_j}{dT} = -\frac{m_i\left[m_i \times \left(1 + \sqrt{T_r}\right)\right]}{\sqrt{T_r}} \quad (21)$$

Adding all the terms, molar enthalpy [H_m] is

$$H_m = \sum x_i H_{ideal,i} + \left[\sum x_i C_{p,i}\right]\left(T - T_{ref}\right) + RT[Z-1] + \left[\frac{T\left(\frac{da}{dT}\right) - a_m}{b_m} \times ln\left[\frac{Z+B}{Z}\right]\right] \quad (22)$$

The gas viscosity can be computed using Lee et al, 1966 [3], as follows,

$$\mu_g = K_1 e^{X\rho^Y} \quad (23)$$

Where,

$$K_1 = \frac{\left[0.00094 + \left[2 \times 10^{-6} MW_g\right]\right] \times T^{1.5}}{\left[209 + 19MW_g + T\right]} \quad (24)$$

$$X = 3.5 + \frac{986}{T} + 0.01MW_g \quad (25)$$

$$Y = 2.4 - 0.2X \quad (26)$$

μ_g = Gas Viscosity [cP]

ρ = Gas density [g/cm³]

P = Pressure [psia]

T = Temperature [⁰Rankine]

MW_g = Gas Molecular weight [-]

The Lee gas viscosity correlation is valid for

- 100 psia [6.9 bara]< P <8000 psia [551 bara]
- 100⁰F (37.8⁰C) < T < 340⁰F (171⁰C)
- 0.9 mol% < CO_2 < 3.2 mol%
- 0.0 mol% < N_2 < 4.8 mol%

RO Sizing – ISO 5167-2:2003

To size the restriction orifice [RO], the expression provided in ISO 5167 is written as,

$$q_v = \frac{\varepsilon d^2 C}{\sqrt{1-\beta^4}} \times \frac{\pi}{4} \times \sqrt{\frac{2g[P_1 - P_2]}{\rho}} \quad (27)$$

Where,

$$C = 0.5961 + 0.0261\beta^2 - 0.216\beta^8 + \left[0.000521\left(\frac{10^6\beta^2}{Re}\right)^{0.7}\right] + \left[(0.0188 + 0.0063A)\beta^{3.5}\left(\frac{10^6}{Re}\right)^{0.3}\right] + \left[(0.043 + 0.08e^{-10L_1} - 0.123e^{-7L_1})(1 - 0.11A)\left(\frac{\beta^4}{1-\beta^4}\right)\right] - \left[0.031\left(M_2' - 0.8{M_2'}^{1.1}\right)\beta^{1.3}\right] \quad (28)$$

Where, D < 71.12 mm, the following term should be added as $+\,0.011(0.75-\beta)\left[2.8-\frac{D}{25.4}\right]$

$$\beta = \frac{d}{D} \tag{29}$$

$$\varepsilon = 1 - \left[[0.351 + 0.256\beta^4 + 0.93\beta^8]\left[1-\left(\frac{P_2}{P_1}\right)^{\frac{1}{k}}\right]\right] \tag{30}$$

d = RO diameter [mm]

D = Pipe diameter [mm]

β = Diameter ratio [-]

$k = C_p/C_v$ = Specific heat ratio [-]

Re = Reynolds number w.r.t 'D' [-]

The discharge coefficient [C] expression is referred to as the Reader-Harris/Gallagher (1998) equation and is valid only for the tapping arrangements specified in Sec 5.2.2 and 5.2.3 of ISO 5167-2:2003

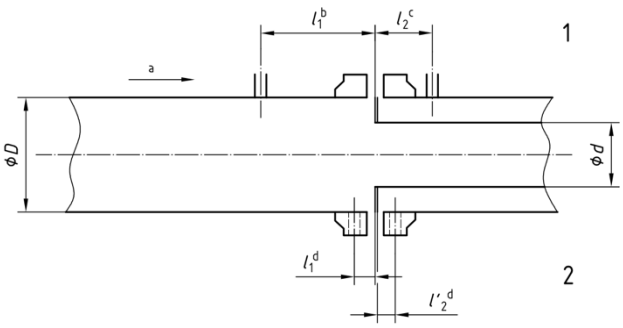

Fig 2. Spacing of Pressure Tappings for Orifice Plates with D and D/2 tappings or flange tappings

$L_1 = l_1/D$ is the quotient of the distance of the upstream tapping from the upstream face of the plate and the pipe diameter

$L'_2 = l'_2/D$ is the quotient of the distance of the downstream tapping from the downstream face of the plate and the pipe diameter (L'_2 denotes the reference of the downstream spacing from the downstream face, while L_2 would denote the reference of the downstream spacing from the upstream face)

$$M'_2 = \frac{2L'_2}{1-\beta} \tag{31}$$

$$A = \left[\frac{19000\beta}{Re}\right]^{0.8} \tag{32}$$

For corner tappings, $L_1 = L'_2 = 0$

For D and D/2 tappings, $L_1 = 1$; $L'_2 = 0.47$

For flange tappings, $L_1 = L'_2 = 25.4/D$ [mm]

The limits of use of ISO 5167 expressions are,

For orifice plates with corner or with D and D/2 pressure tappings,

$$d \geq 12.5\ mm \tag{33}$$

$$50\ mm \leq D \leq 1000\ mm \tag{34}$$

$$0.1 \leq \beta \leq 0.75 \tag{35}$$

$$Re \geq 5{,}000\ for\ 0.1\ \leq \beta \leq 0.75 \tag{36}$$

$$Re \geq 16{,}000\beta^2\ for\ \beta > 0.56 \tag{37}$$

For orifice plates with flange tappings,

$$d \geq 12.5\ mm \tag{38}$$

$$50\ mm \leq D \leq 1000\ mm \tag{39}$$

$$0.1 \leq \beta \leq 0.75 \tag{40}$$

$$\text{Both } Re \geq 5000\ and\ Re \geq 170\beta^2 D \tag{41}$$

Case Study

A restriction orifice [RO] is to be sized for hydrocarbon service operating at a pressure and temperature of 40 bara and 60^{0}C. The flow rate is 1,000 kmol/h and is let down to 4 bara. The reference temperature is 25^{0}C and gas constant is 0.08314 m^3.bar/kmol.K. The fluid composition and properties are,

Table 1. Stream Composition

Component	MW	Mol%	$C_{p,1\ atm,25^0C}$
	kg/kmol	%	kJ/kmol.K
Methane	16.043	76.23	35.97
Ethane	30.070	10.00	53.12
Propane	44.097	5.00	75.42
i-Butane	58.124	1.00	98.30
n-Butane	58.124	1.00	98.91
i-Pentane	72.151	0.30	165.53
n-Pentane	72.151	0.10	167.79
n-Hexane	86.178	0.05	191.94
H_2O	18.015	0.25	79.93
CO_2	44.010	3.00	38.50
H_2S	34.081	0.07	34.54
N_2	28.013	3.00	29.19
Total	**21.17**	**100**	**$\sum C_{p,mix}$ = 41.49**

The critical properties are,

Table 2. Critical properties

Component	T_c	P_c	V_c	ω
	K	bara	m³/kmol	m³/kmol
Methane	190.7	46.41	0.0990	0.0115
Ethane	305.4	48.84	0.1480	0.0986
Propane	369.9	42.57	0.2000	0.1524
i-Butane	408.1	36.48	0.2630	0.1848
n-Butane	425.2	37.97	0.2550	0.2010
i-Pentane	460.4	33.34	0.3080	0.2222
n-Pentane	469.6	33.75	0.3110	0.2539
n-Hexane	507.9	30.32	0.3680	0.3007
H_2O	647.3	221.20	0.0571	0.3440
CO_2	304.1	73.70	0.0939	0.2389
H_2S	373.6	90.08	0.0980	0.0810
N_2	126.2	33.94	0.0900	0.0400

The ideal gas enthalpy [H_{id}] at 1 atm, 25⁰C is taken to be the same as heat of formation [ΔH_f] at 1 atm, 25⁰C. To estimate the mixture ideal gas enthalpy, the ideal gas enthalpy of each component is multiplied by the mole fraction and added as follows,

Table 3. Ideal Gas Enthalpy of Hydrocarbon mixture

Component	Mol%	$H_{id,1\ atm,\ 25^0C}$	$x_i \cdot H_{id,1\ atm,25^0C}$
	%	kJ/kmol	kJ/kmol
Methane	76.23	-74,900	-57,096
Ethane	10.00	-84,738	-8,474
Propane	5.00	-103,890	-5,195
i-Butane	1.00	-134,590	-1,346
n-Butane	1.00	-126,190	-1,262
i-Pentane	0.30	-154,590	-464
n-Pentane	0.10	-146,490	-146
n-Hexane	0.05	-167,290	-84
H_2O	0.25	-241,814	-605
CO_2	3.00	-393,790	-11,814
H_2S	0.07	-20,179	-14
N_2	3.00	0	0
Total	**100**	$\sum H_{id,mix}$	**-86,499**

The reduced temperature [T_r], m_i, α(T), a_i, b_i are as follows,

$$T_{r,CH_4} = \frac{T}{T_c} = \frac{60+273.15}{190.7} = 1.747 \quad (42)$$

$$\sqrt{T_{r,CH_4}} = \sqrt{1.747} = 1.322 \quad (43)$$

$$m_{CH_4} = 0.48505 + [1.55171 \times 0.0115] - [0.15613 \times 0.0115^2] = 0.5029 \quad (44)$$

$$\alpha_{CH_4} = \left[1 + [0.5029(1 - 1.322)]\right]^2 = 0.7026 \quad (45)$$

$$a_{CH_4} = \frac{0.42474 \times 0.08314^2 \times 190.7^2}{46.41} \times 0.7026 \quad (46)$$

$$a_{CH_4} = 1.627 \quad (47)$$

$$b_{CH_4} = \frac{0.08664 \times 0.08314 \times 190.7}{46.41} = 0.0296 \quad (48)$$

$$\frac{d\alpha_{CH_4}}{dT} = \frac{-0.5029[0.5029 \times (1+1.322)]}{1.322} = -0.4443 \quad (49)$$

The above set of calculations are similarly performed for all other components.

Table 4. SRK Parameters [T_r, m_i, α(T)]

Component	$\sqrt{T_r}$	m_i	α(T)
	-	-	-
Methane	1.3217	0.5029	0.7026
Ethane	1.0444	0.6366	0.9443
Propane	0.9490	0.7179	1.0745
i-Butane	0.9035	0.7665	1.1534
n-Butane	0.8852	0.7907	1.1898
i-Pentane	0.8507	0.8222	1.2607
n-Pentane	0.8423	0.8690	1.2929
n-Hexane	0.8099	0.9376	1.3882
H_2O	0.7174	1.0004	1.6453
CO_2	1.0467	0.8469	0.9225
H_2S	0.9443	0.6097	1.0691
N_2	1.6248	0.5469	0.4334

Table 5. SRK Parameters [a_i, b_i]

Component	a_i	b_i
	m⁶.bar/kmol²	m³/kmol
Methane	1.6270	0.0296
Ethane	5.3300	0.0451
Propane	10.2067	0.0626
i-Butane	15.5617	0.0806

n-Butane	16.7436	0.0807
i-Pentane	23.6881	0.0995
n-Pentane	24.9635	0.1002
n-Hexane	34.9070	0.1207
H_2O	9.2098	0.0211
CO_2	3.4206	0.0297
H_2S	4.8952	0.0299
N_2	0.6008	0.0268

Table 6. SRK Parameters [b_m, dα(T)/dT]

Component	b_i	dα(T)/dT
	m³/kmol	-
CH_4	0.0226	-0.4443
C_2H_6	0.0045	-0.7932
C_3H_8	0.0031	-1.0585
i-C_4H_{10}	0.0008	-1.2377
n-C_4H_{10}	0.0008	-1.3314
i-C_5H_{12}	0.0003	-1.4708
n- C_5H_{12}	0.0001	-1.6517
n-C_6H_{14}	0.0001	-1.9644
H_2O	0.0001	-2.3958
CO_2	0.0009	-1.4026
H_2S	0.0000	-0.7655
N_2	0.0008	-0.4832
Total	**0.0340**	

The binary interaction parameters [k_{ij}] for methane-ethane combination is estimated as,

$$k_{ij} = 1 - \left[\frac{2[0.099\times0.148]^{1/6}}{[0.099^{1/3}+0.148^{1/3}]}\right]^3 = 0.0067 \quad (50)$$

The value of a_{ij} for methane-ethane combination is estimated as,

$$a_{ij} = \sqrt{a_{CH_4} \times a_{C_2H_6}} \times [1 - k_{CH_4-C_2H_6}] \quad (51)$$

$$a_{ij} = \sqrt{1.627 \times 5.33} \times [1 - 0.0067] = 2.925 \quad (52)$$

$$a_m = x_i x_j a_{ij} = 0.7623 \times 0.1 \times 2.925 \quad (53)$$

$$a_m = 0.223 \quad (54)$$

The above calculations are similarly performed for all other components, and the values of a_m for all combinations are added.

$$a_m = \sum_i \sum_j x_i x_j \times \sqrt{a_i a_j} \times (1 - k_{ij}) = 2.393 \quad (55)$$

The SRK A and B factors are computed as,

$$A = \frac{0.223\times40}{0.08314^2\times(60+273.15)^2} = 0.1248 \quad (56)$$

$$B = \frac{0.03404\times40}{0.08314\times(60+273.15)} = 0.04916 \quad (57)$$

The gas compressibility factor[Z] of the mixture is calculated as,

$$Z^3 - Z^2 + [0.1248 - 0.04916 - 0.04916^2]Z - (0.1248 \times 0.04916) = 0 \quad (58)$$

$$Z^3 - Z^2 + 0.0732Z - 0.0061 = 0 \quad (59)$$

Solving for Z using Goal seek in MS-Excel,

$$Z = 0.9283 \quad (60)$$

The molar volume [V_m] can be estimated as,

$$P - \frac{0.08314\times333.15}{[V_m-0.03404]} - \frac{2.393}{V_m[V_m+0.03404]} = 0 \quad (61)$$

Solving for V_m using Goal seek in MS-Excel,

$$V_m = 0.6428\ m^3/kmol \quad (62)$$

The mixture density [ρ] is computed as,

$$\rho = \frac{21.17}{0.6428} = 32.92\ kg/m^3 \quad (63)$$

The enthalpy of the hydrocarbon mixture is computed based on dα(T)/dT as,

$$\frac{d\alpha_{CH_4}}{dT} = \frac{-0.5029[0.5029\times(1+1.3217)]}{1.3217} = -0.4443 \quad (64)$$

$$\frac{d\alpha_{C_2H_6}}{dT} = \frac{-0.6366[0.6366\times(1+1.0444)]}{1.0444} = -0.7932 \quad (65)$$

$$\frac{da_m}{dT} = \frac{0.2233}{2}[-0.4443 - 0.7932] = -0.138 \quad (66)$$

The above calculations are similarly performed for all other components, and the value of da_m/dT for all combinations are added.

$$\frac{da}{dT} = \sum_i \sum_j \frac{da_m}{dT} = -1.5842 \frac{m^6 bar}{kmol^2.K} \quad (67)$$

The mixture specific heat is calculated as,

$$\left[\sum x_i C_{p,i}\right](T - T_{ref}) = 41.49 \times [60 - 25] \quad (68)$$

$$\left[\sum x_i C_{p,i}\right](T - T_{ref}) = 1452.1\ kJ/kmol \quad (69)$$

The residual molar enthalpy is calculated as,

$$H^R = \left[[0.08314 \times (60 + 273.15)] \times [0.9283 - 1]\right] + \left[\frac{[(60+273.15)\times(-1.5842)]-2.393}{0.03404} \times ln\left[\frac{0.9283+0.04916}{0.9283}\right]\right] = -805.66\, kJ/kmol \quad (70)$$

Adding all the terms, molar enthalpy [H_m] is

$$H_m = -86{,}499 + 1452.1 - 805.66 \quad (71)$$

$$H_m = -85{,}852.2\ kJ/kmol \quad (72)$$

The mass enthalpy [H_{mass}] becomes,

$$H_{mass} = \frac{-85{,}852.2}{21.17} = -4{,}056\, kJ/kg \quad (73)$$

The gas viscosity is estimated as,

ρ = 32.92 kg/m^3 =0.03292 g/cm^3

T = 60^{0}C ≃ 600^{0}R

MW_g = 21.17

$$K_1 = \frac{\left[0.00094+\left[(2\times10^{-6})\times21.17\right]\right]\times600^{1.5}}{[209+(19\times21.17)+600]} \quad (74)$$

$$K_1 = 0.0119204 \quad (75)$$

$$X = 3.5 + \frac{986}{600} + (0.01 \times 21.17) = 5.355 \quad (76)$$

$$Y = 2.4 - [0.2 \times 5.355] = 1.329 \quad (77)$$

$$\mu_g = 0.0119204 \times e^{5.355\times0.03292^{1.329}} \quad (78)$$

$$\mu_g = 0.01262\ cP \quad (79)$$

Restriction Orifice [RO] Sizing

The restriction orifice [RO] is installed in a pipe of ID 154.10 mm with a flange tapping. For a flow rate of 1,000 kmol/h, the required RO size is,

$$A_{pipe} = \frac{\pi}{4} \times \left(\frac{154.10}{1000}\right)^2 = 0.01865\, m^2 \quad (80)$$

The required volumetric flow rate [$q_{v,req}$] is,

$$q_{v,req} = \frac{1000\times21.17}{32.92} = 642.8\ m^3/h \quad (81)$$

The fluid velocity is,

$$V = \frac{q_{v,req}}{A_{pipe}} = \frac{642.8}{0.01865\times3600} = 9.6\ m/s \quad (82)$$

The fluid mass specific heat is assumed to change very little between RO inlet and outlet

$$C_{p,1\,atm,25^\circ C} = 41.49\,\frac{kJ}{kmol}.K \quad (83)$$

The Reynolds number is calculated as,

$$Re = \frac{ID_{Pipe}\times V\times\rho}{\mu_g} = \frac{0.1541\times9.6\times32.92}{(0.0126/1000)} \quad (84)$$

$$Re = 3{,}849{,}878 \quad (85)$$

The specific heat ratio is computed as,

$$k = \frac{C_p}{C_v} = \frac{C_p}{C_p-R} = \frac{41.49}{41.49-8.314} = 1.2506 \quad (86)$$

To estimate the orifice diameter [d], an iterative approach is taken up. With a guess value of 'd', the equations become

The diameter ratio [β] is calculated as,

$$\beta = \frac{d}{D} = \frac{d}{0.1541} \quad (87)$$

$$\varepsilon = 1 - \left[\left[0.351 + 0.256\left(\frac{d}{0.1541}\right)^4 + 0.93\left(\frac{d}{0.1541}\right)^8\right] \times \left[1 - \left(\frac{4}{40}\right)^{\frac{1}{1.2506}}\right]\right] \quad (88)$$

For flange tappings, $L_1 = L'_2$ = 25.4/D [mm]

$$L_1 = L'_2 = \frac{25.4}{154.1} = 0.1648 \quad (89)$$

$$M'_2 = \frac{2\times0.1648}{1-\frac{d}{0.1541}} \quad (90)$$

$$A = \left[\frac{19000\times\frac{d}{0.1541}}{3{,}849{,}878}\right]^{0.8} \quad (91)$$

$$C = 0.5961 + 0.0261\left(\frac{d}{0.1541}\right)^2 - 0.216\left(\frac{d}{0.1541}\right)^8 + \left[0.000521\left(\frac{10^6\left(\frac{d}{0.1541}\right)^2}{3{,}849{,}878}\right)^{0.7}\right] + \left[\left(0.0188 + 0.0063\left[\frac{19000\times\frac{d}{0.1541}}{3{,}849{,}878}\right]^{0.8}\right)\frac{d}{0.1541}^{3.5}\left(\frac{10^6}{3{,}849{,}878}\right)^{0.3}\right] + \left[(0.043 + 0.08e^{-1.648} - 0.123e^{-1.1536})\left(1 - 0.11\left[\frac{19000\times\frac{d}{0.1541}}{3{,}849{,}878}\right]^{0.8}\right)\left(\frac{\frac{d}{0.1541}^4}{1-\frac{d}{0.1541}^4}\right)\right] - \left[0.031\left(\frac{2\times0.1648}{1-\frac{d}{0.1541}} - 0.8\times\frac{2\times0.1648}{1-\frac{d}{0.1541}}^{1.1}\right)\frac{d}{0.1541}^{1.3}\right] \quad (92)$$

$$q_v - \frac{\varepsilon d^2 C}{\sqrt{1-\beta^4}} \times \frac{\pi}{4} \times \sqrt{\frac{2g[P_1-P_2]}{\rho}} = 0 \quad (93)$$

Solving the above set of equations iteratively, the orifice diameter [d] and β for a volumetric flow rate of 642.8 m^3/h [1000 kmol/h] is,

$$d = 34.3\ mm \quad (94)$$

$$\beta = \frac{34.3}{0.1541} = 0.2226 \quad (95)$$

The discharge temperature of the hydrocarbon fluid exiting the restriction orifice is computed for a discharge pressure of 4 bara using SRK EoS. The discharge temperature at exit of the orifice comes to 42.5^0C

References

1. *https://www.linkedin.com/pulse/600mm-sufficient-keep-blowdown-valve-functional-saeid-rahimi-mofrad/*
2. "*The Properties of Gases and Liquids*", Bruce Poling, John M. Prausnitz, John P. O'Connell, 5th Edition
3. *https://wiki.pengtools.com/index.php?title=Lee_correlation*
4. "*Measurement of fluid flow by means of pressure differential devices inserted in circular cross-section conduits running full*" – Part 2: Orifice Plates, ISO 5167-2:2003(E)

Appendix A – RO Sizing and Fluid Properties Estimation – SRK EoS

Natural Gas Conditions		
Parameter	**Value**	**Units**
Gas Constant [R]	0.08314	m^3.bar/kmol.K
Standard Pressure [P_{std}]	1.01325	bar(a)
Reference Temperature [T_{ref}]	25.0	^{0}C
Flowing Pressure [P]	**40.0**	bar(a)
Flowing Temperature [T]	**60.0**	^{0}C
	333.15	K
Exit Pressure [T_{exit}]	**4.0**	bara
Molar Flow Rate [q_m]	**1,000**	kmol/h
Soave Redlich Kwong (SRK) EoS Calculations		
Mixture Attraction Parameter [a_m]	2.3930	m^6.bar/kmol^2
Mixture Co-volume Parameter [b_m]	0.03404	m^3/kmol
SRK A Factor	0.1248	-
SRK B Factor	0.04916	-
[A-B-B^2]	0.0732	-
AB	0.0061	-
$Z^3-Z^2+(A-B-B^2)Z-AB=0$	0.0000	-
Compressibility Factor [Z] [-]	**0.9283**	**Solve for Z, V_m, T_{exit}**
$P - [RT/(V_m-b_m)] - [a_m/(V_m(V_m+b)] = 0$	0.0000	
Molar Volume [V_m] [m^3/kmol]	**0.6428**	
Density [ρ_m]	**32.92**	kg / m^3
$\sum$ [da/dT]	-1.5842	m^6.bar/kmol^2.K
$\sum C_p.dT$ [T_{ref} = 298.15 K]	1452.1	kJ/kmol
Residual Molar Enthalpy [$H_{,R}$]	-805.66	kJ/kmol
Molar Enthalpy [H] = $H_{id} + \sum C_p.dT + H_{,R}$	-85,852	kJ/kmol
Mass Enthalpy [$H_{,mass}$]	**-4,056**	kJ/kg
Viscosity [**μ**]	**0.0126**	cP

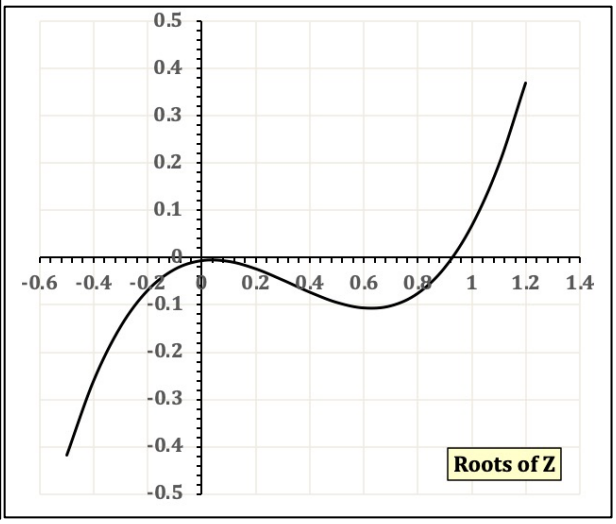

Restriction Orifice [RO]

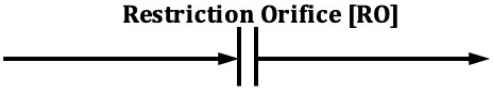

Inlet Pressure [P_{inlet}]	40.0	bar(a)	Exit Pressure [P_{exit}]	4.0	bar(a)
Inlet Temperature [T_{inlet}]	60.0	^{0}C	**Exit Temperature [T_{exit}]**	**42.5**	**^{0}C**
Inlet Mass Enthalpy [$H_{,inlet,mass}$]	-4,056	kJ/kg	Exit Mass Enthalpy [$H_{,exit,mass}$]	-4,056	kJ/kg
Molar Flow Rate [q_m]	1,000	kmol/h	Molar Flow Rate [q_m]	1,000	kmol/h

Appendix B – Soave-Redlich-Kwong [SRK] Estimates

Soave Redlich Kwong [SRK] Equation of State [EoS]

Component	MW	Mol%	Cp	T_c	P_c	V_c	Omega [ω]	Ideal gas Enthalpy [H_{id}] at 25 ^{0}C [ΔH_f]		$\sqrt{T_r}$	m_i	$\alpha(T)$	a_i	b_i	a_m	b_m	$d\alpha(T)/dT$
	[kg/kmol]	[%]	[kJ/kmol.K]	[K]	[bara]	[m^3/kmol]	[-]	[kJ/kmol]		-	[-]	[-]	[m^6.bar/kmol^2]	[m^3/kmol]	[m^6.bar/Kmol^2]	[m^3/kmol]	[-]
Methane	16.043	**76.23**	35.97	190.7	46.41	0.0990	0.0115	-74,900	-57,096	1.3217	0.5029	0.7026	1.6270	0.0296	-	0.0226	-0.4443
Ethane	30.070	**10.00**	53.12	305.4	48.84	0.1480	0.0986	-84,738	-8,474	1.0444	0.6366	0.9443	5.3300	0.0451	-	0.0045	-0.7932
Propane	44.097	**5.00**	75.42	369.9	42.57	0.2000	0.1524	-103,890	-5,195	0.9490	0.7179	1.0745	10.2067	0.0626	-	0.0031	-1.0585
i-Butane	58.124	**1.00**	98.30	408.1	36.48	0.2630	0.1848	-134,590	-1,346	0.9035	0.7665	1.1534	15.5617	0.0806	-	0.0008	-1.2377
n-Butane	58.124	**1.00**	98.91	425.2	37.97	0.2550	0.2010	-126,190	-1,262	0.8852	0.7907	1.1898	16.7436	0.0807	-	0.0008	-1.3314
i-Pentane	72.151	**0.30**	165.53	460.4	33.34	0.3080	0.2222	-154,590	-464	0.8507	0.8222	1.2607	23.6881	0.0995	-	0.0003	-1.4708
n-Pentane	72.151	**0.10**	167.79	469.6	33.75	0.3110	0.2539	-146,490	-146	0.8423	0.8690	1.2929	24.9635	0.1002	-	0.0001	-1.6517
n-Hexane	86.178	**0.05**	191.94	507.9	30.32	0.3680	0.3007	-167,290	-84	0.8099	0.9376	1.3882	34.9070	0.1207	-	0.0001	-1.9644
H_2O	18.015	**0.25**	79.93	647.3	221.20	0.0571	0.3440	-241,814	-605	0.7174	1.0004	1.6453	9.2098	0.0211	-	0.0001	-2.3958
CO_2	44.010	**3.00**	38.50	304.1	73.70	0.0939	0.2389	-393,790	-11,814	1.0467	0.8469	0.9225	3.4206	0.0297	-	0.0009	-1.4026
H_2S	34.081	**0.07**	34.54	373.6	90.08	0.0980	0.0810	-20,179	-14	0.9443	0.6097	1.0691	4.8952	0.0299	-	0.0000	-0.7655
N_2	28.013	**3.00**	29.19	126.2	33.94	0.0900	0.0400	0	0	1.6248	0.5469	0.4334	0.6008	0.0268	-	0.0008	-0.4832
Avg MW	**21.17**	**100.00**	**41.49**					**Total**	**-86,499**					**Total**	**2.3930**	**0.0340**	

Appendix C – Soave-Redlich-Kwong [SRK] Parameters

Binary Interaction Factors [BIP] [K_{ij}] [Cheu-Prausnitz Correlation]

BIP [K_{ij}] i↓\ j→		CH_4	C_2H_6	C_3H_8	i-C_4	n-C_4	i-C_5	n-C_5	n-C_6	H_2O	CO_2	H_2S	N_2
		0.0990	**0.1480**	**0.2000**	**0.2630**	**0.2550**	**0.3080**	**0.3110**	**0.3680**	**0.0571**	**0.0939**	**0.0980**	**0.0900**
CH_4	**0.0990**	0.000	0.007	0.020	0.039	0.036	0.052	0.053	0.069	0.013	0.000	0.000	0.000
C_2H_6	**0.1480**	0.007	0.000	0.004	0.014	0.012	0.022	0.023	0.034	0.037	0.009	0.007	0.010
C_3H_8	**0.2000**	0.020	0.004	0.000	0.003	0.002	0.008	0.008	0.015	0.063	0.023	0.021	0.026
i-C_4	**0.2630**	0.039	0.014	0.003	0.000	0.000	0.001	0.001	0.005	0.092	0.043	0.040	0.047
n-C_4	**0.2550**	0.036	0.012	0.002	0.000	0.000	0.001	0.002	0.006	0.088	0.041	0.037	0.044
i-C_5	**0.3080**	0.052	0.022	0.008	0.001	0.001	0.000	0.000	0.001	0.110	0.057	0.053	0.061
n-C_5	**0.3110**	0.053	0.023	0.008	0.001	0.002	0.000	0.000	0.001	0.111	0.058	0.054	0.062
n-C_6	**0.3680**	0.069	0.034	0.015	0.005	0.006	0.001	0.001	0.000	0.133	0.074	0.070	0.079
H_2O	**0.0571**	0.013	0.037	0.063	0.092	0.088	0.110	0.111	0.133	0.000	0.010	0.012	0.009
CO_2	**0.0939**	0.000	0.009	0.023	0.043	0.041	0.057	0.058	0.074	0.010	0.000	0.000	0.000
H_2S	**0.0980**	0.000	0.007	0.021	0.040	0.037	0.053	0.054	0.070	0.012	0.000	0.000	0.000
N_2	**0.0900**	0.000	0.010	0.026	0.047	0.044	0.061	0.062	0.079	0.009	0.000	0.000	0.000

a_{ij} Table [$a_{ij} = (\sqrt{a_i.a_j}) . (1-k_{ij})$]

$a_{ij} = (\sqrt{a_i.a_j}) \times (1-k_{ij})$ a_i→ a_j↓		CH_4	C_2H_6	C_3H_8	i-C_4	n-C_4	i-C_5	n-C_5	n-C_6	H_2O	CO_2	H_2S	N_2
		1.6270	**5.3300**	**10.2067**	**15.5617**	**16.7436**	**23.6881**	**24.9635**	**34.9070**	**9.2098**	**3.4206**	**4.8952**	**0.6008**
CH_4	**1.6270**	1.627	2.925	3.992	4.836	5.029	5.886	6.036	7.018	3.822	2.359	2.822	0.988
C_2H_6	**5.3300**	2.925	5.330	7.348	8.983	9.331	10.988	11.274	13.178	6.748	4.233	5.072	1.771
C_3H_8	**10.2067**	3.992	7.348	10.207	12.564	13.041	15.429	15.833	18.586	9.085	5.770	6.921	2.412
i-C_4	**15.5617**	4.836	8.983	12.564	15.562	16.141	19.180	19.687	23.198	10.874	6.982	8.382	2.915
n-C_4	**16.7436**	5.029	9.331	13.041	16.141	16.744	19.886	20.411	24.041	11.322	7.261	8.716	3.032
i-C_5	**23.6881**	5.886	10.988	15.429	19.180	19.886	23.688	24.317	28.718	13.142	8.491	10.199	3.544
n-C_5	**24.9635**	6.036	11.274	15.833	19.687	20.411	24.317	24.963	29.485	13.473	8.708	10.461	3.634
n-C_6	**34.9070**	7.018	13.178	18.586	23.198	24.041	28.718	29.485	34.907	15.550	10.117	12.160	4.219
H_2O	**9.2098**	3.822	6.748	9.085	10.874	11.322	13.142	13.473	15.550	9.210	5.555	6.633	2.332
CO_2	**3.4206**	2.359	4.233	5.770	6.982	7.261	8.491	8.708	10.117	5.555	3.421	4.092	1.433
H_2S	**4.8952**	2.822	5.072	6.921	8.382	8.716	10.199	10.461	12.160	6.633	4.092	4.895	1.714
N_2	**0.6008**	0.988	1.771	2.412	2.915	3.032	3.544	3.634	4.219	2.332	1.433	1.714	0.601

$a_m = x_i . x_j . a_{ij}$

$x_i . x_j . a_{ij}$ [i↓\ j→]		CH_4	C_2H_6	C_3H_8	i-C_4	n-C_4	i-C_5	n-C_5	n-C_6	H_2O	CO_2	H_2S	N_2
		0.7623	**0.1000**	**0.0500**	**0.0100**	**0.0100**	**0.0030**	**0.0010**	**0.0005**	**0.0025**	**0.0300**	**0.0007**	**0.0300**
CH_4	**0.7623**	0.945	0.223	0.152	0.037	0.038	0.013	0.005	0.003	0.007	0.054	0.002	0.023
C_2H_6	**0.1000**	0.223	0.053	0.037	0.009	0.009	0.003	0.001	0.001	0.002	0.013	0.000	0.005
C_3H_8	**0.0500**	0.152	0.037	0.026	0.006	0.007	0.002	0.001	0.000	0.001	0.009	0.000	0.004
i-C_4	**0.0100**	0.037	0.009	0.006	0.002	0.002	0.001	0.000	0.000	0.000	0.002	0.000	0.001
n-C_4	**0.0100**	0.038	0.009	0.007	0.002	0.002	0.001	0.000	0.000	0.000	0.002	0.000	0.001
i-C_5	**0.0030**	0.013	0.003	0.002	0.001	0.001	0.000	0.000	0.000	0.000	0.001	0.000	0.000
n-C_5	**0.0010**	0.005	0.001	0.001	0.000	0.000	0.000	0.000	0.000	0.000	0.000	0.000	0.000
n-C_6	**0.0005**	0.003	0.001	0.000	0.000	0.000	0.000	0.000	0.000	0.000	0.000	0.000	0.000
H_2O	**0.0025**	0.007	0.002	0.001	0.000	0.000	0.000	0.000	0.000	0.000	0.000	0.000	0.000
CO_2	**0.0300**	0.054	0.013	0.009	0.002	0.002	0.001	0.000	0.000	0.000	0.003	0.000	0.001
H_2S	**0.0007**	0.002	0.000	0.000	0.000	0.000	0.000	0.000	0.000	0.000	0.000	0.000	0.000
N_2	**0.0300**	0.023	0.005	0.004	0.001	0.001	0.000	0.000	0.000	0.000	0.001	0.000	0.001

da/dT

$da/dT = x_i.x_j.0.5.(\sqrt{a_i.a_j}) . (1-k_{ij}) . [(d\alpha_i/dT) + (d\alpha_j/dT)]$ $(d\alpha i/dT)$→ $(d\alpha j/dT)$↓		CH_4	C_2H_6	C_3H_8	i-C_4	n-C_4	i-C_5	n-C_5	n-C_6	H_2O	CO_2	H_2S	N_2
		-0.4443	**-0.7932**	**-1.0585**	**-1.2377**	**-1.3314**	**-1.4708**	**-1.6517**	**-1.9644**	**-2.3958**	**-1.4026**	**-0.7655**	**-0.4832**
CH_4	**-0.4443**	-0.420	-0.138	-0.114	-0.031	-0.034	-0.013	-0.005	-0.003	-0.010	-0.050	-0.001	-0.010
C_2H_6	**-0.7932**	-0.138	-0.042	-0.034	-0.009	-0.010	-0.004	-0.001	-0.001	-0.003	-0.014	0.000	-0.003
C_3H_8	**-1.0585**	-0.114	-0.034	-0.027	-0.007	-0.008	-0.003	-0.001	-0.001	-0.002	-0.011	0.000	-0.003
i-C_4	**-1.2377**	-0.031	-0.009	-0.007	-0.002	-0.002	-0.001	0.000	0.000	0.000	-0.003	0.000	-0.001
n-C_4	**-1.3314**	-0.034	-0.010	-0.008	-0.002	-0.002	-0.001	0.000	0.000	-0.001	-0.003	0.000	-0.001
i-C_5	**-1.4708**	-0.013	-0.004	-0.003	-0.001	-0.001	0.000	0.000	0.000	0.000	-0.001	0.000	0.000
n-C_5	**-1.6517**	-0.005	-0.001	-0.001	0.000	0.000	0.000	0.000	0.000	0.000	0.000	0.000	0.000
n-C_6	**-1.9644**	-0.003	-0.001	-0.001	0.000	0.000	0.000	0.000	0.000	0.000	0.000	0.000	0.000
H_2O	**-2.3958**	-0.010	-0.003	-0.002	0.000	-0.001	0.000	0.000	0.000	0.000	-0.001	0.000	0.000
CO_2	**-1.4026**	-0.050	-0.014	-0.011	-0.003	-0.003	-0.001	0.000	0.000	-0.001	-0.004	0.000	-0.001
H_2S	**-0.7655**	-0.001	0.000	0.000	0.000	0.000	0.000	0.000	0.000	0.000	0.000	0.000	0.000
N_2	**-0.4832**	-0.010	-0.003	-0.003	-0.001	-0.001	0.000	0.000	0.000	0.000	-0.001	0.000	0.000

Pag