Neurocomputing 647 (2025) 130497

Contents lists available at ScienceDirect

Neurocomputing

journal homepage: www.elsevier.com/locate/neucom

# Simplified Transformer

Lei Xu, Haiying Luo, Zhang Yi *

*Intelligent Interdisciplinary Research Center and College of Computer Science, Sichuan University, Chengdu, 610065, People's Republic of China*

ARTICLE INFO

Communicated by L. Celona

*Keywords:*
Attention
Transformer
Bilinear
Complexity
Computation efficiency

ABSTRACT

Based on two interesting mathematical observations that almost all square matrices are diagonalizable and invertible, this paper proposes a simplified transformer called SimplTrans, which eliminates parameters in the attention mechanism. It is known that the success of the Transformer can be attributed to its embedded attention mechanism, which plays a crucial role in the network. However, the introduction of a large number of parameters with this attention mechanism hinders the efficiency of learning and computation in the Transformer. The proposed SimplTrans leverages this parameter-free attention mechanism, leading to a significant reduction in the number of parameters. As a result, the proposed SimplTrans achieves improved learning and computation efficiency compared to the original Transformer. Furthermore, the complexity of SimplTrans is also reduced to that of the original Transformer, resulting in superior performance across various tasks, as demonstrated in our experiments. The associated code can be found at https://github.com/IntelligentInterdisciplinary/SimplTrans.

## 1. Introduction

Let us starting from the well-known exclusive-or (XOR) classification problem. The XOR problem serves as a fundamental logical operation in the field of computer science and is widely recognized as a basic benchmark for evaluating the categorization capabilities of neural networks. The XOR problem is to classify four points $p_1 = (0,1), p_2 = (1,0), p_3 = (0,0), p_4 = (1,1)$ on the plan into two classes with the first two points in one class while the rest in another one. It is nonlinear classification problem, see Fig. 1 for illustration. By labeling $l_1 = 1, l_2 = 1, l_3 = 0, l_4 = 0$, solving the XOR problem is to establish a mapping such that $f : p_i \to l_i$ for $1 \le i \le 4$.

It is well-known that one-layer neural network with any nondecreasing activation function cannot solve the XOR classification problem. This fact was historically employed to demonstrate the computational limitations of neural networks [1]. The essential reason behind the failure of such a network to solve the XOR problem lies in its equivalence to a linear mapping, as illustrated intuitively in Fig. 2.

Let us introduce a minor adjustment to the one-layer neural network by replacing the linear mapping with a bilinear mapping, as illustrated in Fig. 3. The network can be now written as

$$Y = [x_1, x_2] \begin{bmatrix} 1 & -1 \\ -1 & 1 \end{bmatrix} \begin{bmatrix} x_1 \\ x_2 \end{bmatrix} = (x_1 - x_2)^2 . \tag{1}$$

Interestingly, it can be readily verified that this network, incorporating a bilinear mapping, can impeccably solve the XOR classification problem. Refer to Fig. 4 for a visual representation that offers intuitive clarity.

Why is a small change, from a linear to a bilinear one-layer network, sufficient to solve the XOR classification problem? The essence lies in the increased nonlinearity of the network. Thus, augmenting the nonlinearity of a network is crucial for enhancing its computational capacity.

The significance of the attention mechanism in the well-known Transformer artificial neural network is widely acknowledged. Undoubtedly, the success of the Transformer is heavily reliant on this mechanism. The recent achievements of ChatGPT have further popularized the attention mechanism like never before. Next, we will demonstrate that the attention mechanism contains, in fact, a bilinear mapping.

Let $\mathbf{X}$ be the input data, and $\mathbf{W^Q}, \mathbf{W^K}, \mathbf{W^V}$ be the $\mathbf{Q}, \mathbf{K}, \mathbf{V}$ matrix, then, the $\mathbf{Q}, \mathbf{K}, \mathbf{V}$ can be calculated by

$$\mathbf{Q} = \mathbf{X}\mathbf{W^Q}, \mathbf{K} = \mathbf{X}\mathbf{W^K}, \mathbf{V} = \mathbf{X}\mathbf{W^V}. \tag{2}$$

The self-attention function can be defined by [2]

$$Attention(\mathbf{X}) = softmax\left(\frac{\mathbf{Q}\mathbf{K}^T}{\sqrt{d_k}}\right)\mathbf{V} \tag{3}$$

where $d_k$ is the dimension of $\mathbf{X}$. Since

$$\frac{\mathbf{Q}\mathbf{K}^T}{\sqrt{d_k}} = \frac{\mathbf{X}\mathbf{W^Q}[\mathbf{X}\mathbf{W^K}]^T}{\sqrt{d_k}} = X\frac{\mathbf{W^Q}[\mathbf{W^K}]^T}{\sqrt{d_k}}\mathbf{X}^T \tag{4}$$

* Corresponding author.
*E-mail address:* zhangyi@scu.edu.cn (Z. Yi).

https://doi.org/10.1016/j.neucom.2025.130497
Received 11 March 2024; Received in revised form 27 April 2025; Accepted 10 May 2025
Available online 29 May 2025
0925-2312/© 2025 Published by Elsevier B.V.

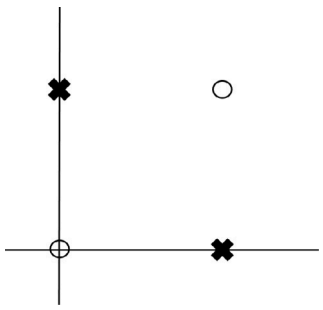

**Fig. 1.** Illustration of XOR classification problem.

and denote

$$\mathbf{A} = \frac{\mathbf{W^Q}[\mathbf{W^K}]^T}{\sqrt{d_k}} \tag{5}$$

then,

$$Attention(\mathbf{X}) = softmax\left(\frac{\mathbf{QK}^T}{\sqrt{d_k}}\right)\mathbf{V} \tag{6}$$

$$= softmax\left(\mathbf{XAX}^T\right)\mathbf{V}. \tag{7}$$

Clearly, $\mathbf{XAX}^T$ is a bilinear mapping, thus, the attention function

$$Attention : \mathbf{X} \longrightarrow softmax\left(\mathbf{XAX}^T\right)\mathbf{V} \tag{8}$$

contains a bilinear mapping which plays the key role in the attention mechanism.

The success of the Transformer is believed to be attributed to the introduction of the bilinear mapping embedded in its attention mechanism, which significantly increased the network's nonlinearity. Undoubtedly, the attention mechanism within the Transformer is a precisely designed module. However, it contains a substantial number of parameters. As we have analyzed earlier, nonlinearity is essential for the attention mechanism. Therefore, this paper proposes a Simplified Transformer that retains only the nonlinearity in the attention mechanism and eliminates two unnecessary parameter matrices. The motivation for this modification is based on two observations: almost all square matrices are diagonalizable and invertible. This modification greatly reduces the number of parameters in the original Transformer, resulting in a more efficient computation of the network.

The rest of this paper is organized as follows: Section 2 gives an overview of previous studies on the Transformer and its attention mechanism. Section 3 presents the theoretical analysis for simplifying the traditional attention mechanism. In Section 4, we propose two simplified transformers. Extensive experiments are conducted in Section 5 to demonstrate the performance of the proposed network. Finally, Section 6 provides the conclusions.

## 2. Related work

Offering a significant array of performance enhancements, the Transformer [2] has gained widespread popularity, making significant strides in numerous deep learning benchmarks due to its adoption in Transformer-based architectures [3–7]. Central to the Transformer's triumph is its attention mechanism, empowering the model to efficiently capture and comprehend the intricate long-range or multi-scale dependencies. This attribute results in enhanced representations and improved performance across a diverse range of tasks, including natural language processing, computer vision, and beyond.

While Transformer-based models have demonstrated remarkable performance on downstream tasks, there exists a notable opportunity for improvement, particularly in enhancing computational efficiency. The quadratic computational complexity of the attention module concerning sequence or patch length poses practical challenges, particularly when dealing with extensive datasets comprising lengthy sequences or high-resolution images, necessitating substantial computational resources. Researchers are actively addressing these concerns and exploring more efficient Transformer model variations. To this end, two predominant and widely adopted approaches have emerged: sparsity-based methods [8–11] and approximation-based [12–15] methods. These endeavors aim to harness the Transformer's potential while mitigating computational burdens.

Sparsity-based methods have garnered widespread adoption for mitigating computational costs within attention mechanisms. Specifically, Sparse Transformer [8] employs sparsity patterns to curtail the quadratic complexity of attention from $O(N^2)$ to a more manageable $O(N\sqrt{N})$, where N signifies sequence length. Nevertheless, these benefits come with potential drawbacks, as the introduced sparsity patterns may result in information loss, particularly affecting tasks necessitating a holistic grasp of global context. LogTrans [9] addresses locality-agnostic behavior and memory bottleneck in applying Transformers to time series forecasting. By reducing the number of attention calculations to logarithmic scale, LogTrans significantly lowers the memory cost from $O(L^2)$ to $O(L(\log L)^2)$, making it efficient for long sequences without losing global context. Reformer [10], employing Locality-Sensitive Hashing (LSH) for attention, attains complexity reduction to $O(N\log(N))$. Yet, its performance is sensitive to the quality of hashing and may not excel in all data scenarios, especially in tasks where precise attention computations are paramount. Informer [11] addresses the inefficiencies of traditional attention mechanisms by introducing Prob-Sparse Attention, which selectively focuses on the most informative queries and keys, reducing the computational complexity from $O(N^2)$ to $O(N\log(N))$. This approach prioritizes critical sequence elements, significantly decreasing computational costs while maintaining high model performance. However, the sparse attention mechanism may overlook less prominent yet essential patterns, potentially leading to a reduction in modeling capacity, especially in capturing fine-grained dependencies.

Approximation-based methods simplify the original attention matrix to lower, even linear, complexity through approximating the attention mechanism, thereby reducing computational costs. Linformer [12] reduces attention complexity to $O(N)$ by approximating the decomposed smaller attentions from the scaled dot-product attention through linear projections. However, it sacrifices modeling capacity for efficiency, potentially struggling with tasks requiring the capture of complex, long-range relationships. Linear Transformer [13] reduces complexity to $O(N)$ by approximating the linear dot-product of kernel feature maps. Similar to Linformer, its limitation is the potential loss of modeling capacity, making it less suitable for tasks demanding extensive context understanding. Performer [14] achieves complexity reduction to $O(LMd)$ by approximating the softmax attention kernel without explicit computation and storage of the attention matrix, where $L$ represents sequence length, $M$ denotes the number of heads, and $d$ signifies the vector dimension. However, its limitation is the potential approximation error, which may impact performance in tasks requiring precise attention calculations. Perceiver [15] attains complexity reduction to $O(N)$ by introducing an innovative approximation for an attention bottleneck using a compact set of latent units. Its limitation lies in the reduced expressive power due to the compact representation, which may affect performance in tasks that demand high-dimensional feature representations or intricate patterns.

In summary, both sparsity-based and approximation-based methods offer computational efficiency gains, yet they entail trade-offs in terms of modeling capacity, precision, and task suitability. This study takes inspiration from **a pivotal insight: the attention mechanism intrinsically embodies a bilinear mapping**. Consequently, it seeks to explore diverse facets of attention, with a particular emphasis on comprehending and harnessing nonlinearity to unlock the full potential of neural networks. It is important to highlight that the Transformer architecture

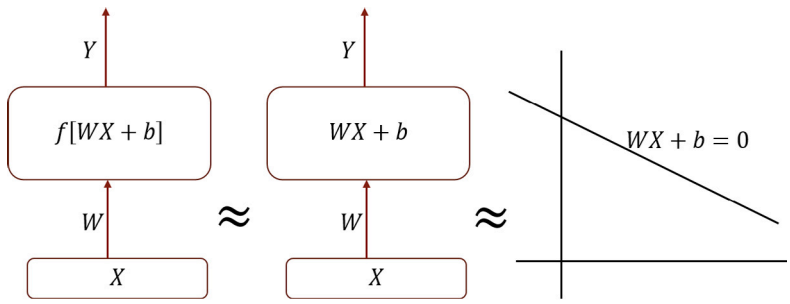


**Fig. 2.** A one-layer neural network with any nondecreasing activation function is unable to solve the XOR classification problem. This limitation arises because a one-layer network is essentially a linear mapping.

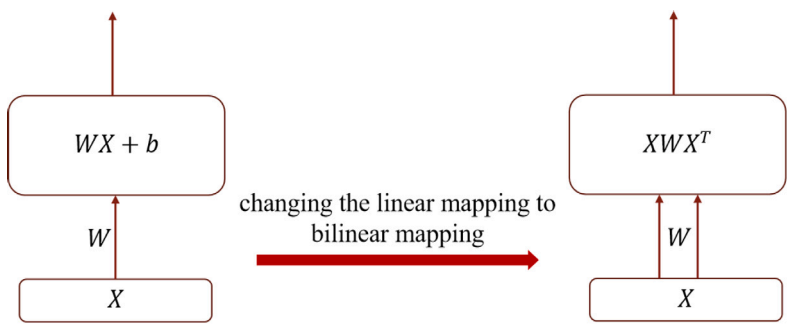


**Fig. 3.** By replacing the linear mapping in the one-layer network with a bilinear mapping, the XOR problem is solved perfectly.

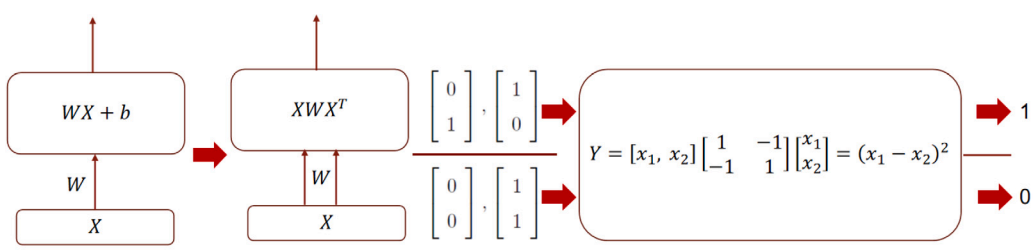


**Fig. 4.** Changing the linear mapping to bilinear mapping perfectly solved the XOR problem.

introduced in this research attains an exceptional time complexity of $O(1)$ during key and value computations. Empirical evidence supports the claim that this not only ensures the optimal performance of the Transformer model but also significantly enhances its computational efficiency.

## 3. On the attention mechanism

The attention mechanism in transformer reported in [2] can be rewritten as

$$Attention(\mathbf{X}) = softmax\left(\mathbf{X}\mathbf{A}\mathbf{X}^T\right)\mathbf{V} \tag{9}$$

where $\mathbf{A}$ is a square matrix. The above traditional attention mechanism contains the softmax function, recently studies suggest that the softmax function in the attention mechanism is not necessary [16–20]. Inspired from these works, we remove the softmax function in the attention mechanism and rewrite the attention function as

$$Attention(\mathbf{X}) = \left(\mathbf{X}\mathbf{A}\mathbf{X}^T\right)\mathbf{V}. \tag{10}$$

It contains a bilinear mapping

$$Bilinear(\mathbf{X}) = \mathbf{X}\mathbf{A}\mathbf{X}^T. \tag{11}$$

The central concept of this paper revolves around the substitution of the square matrix $\mathbf{A}$ with the identity matrix. Consequently, the previously mentioned bilinear mapping will undergo substantial simplification, yielding $Bilinear(\mathbf{X}) = \mathbf{X}\mathbf{X}^T$, a formulation devoid of any parameters. How can we justify this simplification? Are there any mathematical theories that substantiate our theory? In the subsequent sections, we will furnish the requisite mathematical theories to underpin our methodology.

First, we introduce some fundamental concepts. Let $S = \{\mathbf{A}|\mathbf{A} \in R^{n\times n}\}$ be the set of all $n\times n$ matrices. We define a norm of matrix $\mathbf{A}$ as:

$$\|\mathbf{A}\| = \sum_{i,j=1}^{n} |a_{ij}|. \tag{12}$$

Given $\epsilon > 0$, we refer to the set:

$$O(\mathbf{A}, \epsilon) = \{\mathbf{B}|\|\mathbf{A} - \mathbf{B}\| < \epsilon\} \tag{13}$$

as the $\epsilon$-open ball around matrix $\mathbf{A}$.

A set $U \subset S$ is called an open set if, for any $\mathbf{A} \in U$, there exists an $\epsilon$-open ball $O(\mathbf{A}, \epsilon) \subset U$ for some $\epsilon$. A set $U \subset S$ is referred to as a dense subset of $S$ if, for any $\mathbf{A} \in S$, any $\epsilon$-open ball around $\mathbf{A}$ contains elements from set $U$.

Before presenting Lemma 1, we will discuss the concept of "almost all". In mathematical terms, "almost all" can be precisely defined as follows: Let $S$ be the set of all $n\times n$ matrices, and let $U$ be the set of all $n\times n$ matrices with distinct eigenvalues. If $U$ is an open and dense subset of $S$, then we can assert that almost all matrices have distinct

eigenvalues [21]. In other words, the set $U$ being open and dense implies that the measure of the set $U-S$ is zero. Consequently, matrices with repeated eigenvalues cannot be observed in practical engineering applications.

**Lemma 1.** *Almost all matrices have distinct eigenvalues.*

**Proof.** For simplicity, let us consider matrices with real eigenvalues only. The case with complex roots can be proved similarly.

Clearly, $U$ is a subset of $S$. First, we will prove that $U$ is a dense subset of $S$. For any $\mathbf{A} \in S$, without loss of generality, let us consider the case where $\mathbf{A}$ has a single $n$-repeated real eigenvalue $\lambda$. The proof for other cases is analogous. By using the well-known Jordan Theorem, we can find an invertible matrix $\mathbf{P}$ such that

$$\mathbf{A} = \mathbf{P}\begin{bmatrix} \lambda & 1 & & & \\ & \lambda & 1 & & \\ & & \ddots & \ddots & \\ & & & \lambda & 1 \\ & & & & \lambda \end{bmatrix}\mathbf{P}^{-1} \tag{14}$$

For any $\epsilon > 0$, we choose:

$$\bar{\epsilon} = \frac{\epsilon}{\|\mathbf{P}\| \cdot \|\mathbf{P}^{-1}\|} \tag{15}$$

Define the matrix:

$$\mathbf{B} = \mathbf{P}\begin{bmatrix} \lambda+\epsilon_1 & 1 & & \\ & \lambda+\epsilon_2 & \ddots & \\ & & \ddots & 1 \\ & & & \lambda+\epsilon_n \end{bmatrix}\mathbf{P}^{-1} \tag{16}$$

where $\epsilon_i > 0$, $\epsilon_i \neq \epsilon_j$ (for $i \neq j$), and $\epsilon_1 + \cdots + \epsilon_n = \bar{\epsilon}$. It is evident that $\mathbf{B}$ has eigenvalues $\lambda + \epsilon_i$ (for $i = 1, \ldots, n$) and, thus, has distinct eigenvalues, i.e., $\mathbf{B} \in U$. In addition,

$$\|\mathbf{A} - \mathbf{B}\| = \left\| \mathbf{P}\begin{bmatrix} \epsilon_1 & & & & \\ & \epsilon_2 & & & \\ & & \ddots & & \\ & & & \epsilon_{n-1} & \\ & & & & \epsilon_n \end{bmatrix}\mathbf{P}^{-1} \right\| \leq \epsilon \tag{17}$$

This implies that $\mathbf{B} \in O(\mathbf{A}, \epsilon)$, demonstrating that $U$ is dense in $S$.

Next, we prove that $U$ is an open set. Take any $\mathbf{A} \in U$, meaning that $\mathbf{A}$ has distinct eigenvalues. Consider the characteristic polynomial of $\mathbf{A}$:

$$\lambda^n + f_{n-1}(\mathbf{A})\lambda^{n-1} + \cdots + f_n(\mathbf{A}) = 0 \tag{18}$$

where, each polynomial coefficient $f_i(\mathbf{A})$ is a function of matrix $\mathbf{A}$. Now, consider the $\epsilon$-open ball $O(\mathbf{A}, \epsilon)$ for any $\mathbf{B} \in O(\mathbf{A}, \epsilon)$. The characteristic equation for matrix $\mathbf{B}$ is:

$$\lambda^n + f_{n-1}(\mathbf{B})\lambda^{n-1} + \cdots + f_n(\mathbf{B}) = 0. \tag{19}$$

As $\epsilon$ becomes sufficiently small, $f_i(\mathbf{A})$ and $f_i(\mathbf{B})$ become arbitrarily close, making the eigenvalues of matrix $\mathbf{B}$ approach those of matrix $\mathbf{A}$. Since $\mathbf{A}$ has distinct eigenvalues, there exists a sufficiently small $\epsilon$ such that the eigenvalues of matrix $\mathbf{B}$ are also distinct, implying $O(\mathbf{A}, \epsilon) \subset U$. This completes the proof that $U$ is an open set.

**Lemma 2.** *Almost all square matrices are invertible.*

**Proof.** Let $S$ be the set of all $n \times n$ matrices, and $U$ be the set of all invertible $n \times n$ matrices. Clearly, $U \subset S$. We will prove that $U$ is an open dense subset of $S$. This proof is very similar to the proof of Lemma 1 and follows a two-step approach. First, we prove that $U$ is dense in $S$, which means that for any non-invertible matrix $\mathbf{A} \in S$, there exists an invertible matrix within any sufficiently small open ball around $\mathbf{A}$. Let $\mathbf{A}$ have a zero eigenvalue of multiplicity $m$. According to the Jordan canonical form theorem, $\mathbf{A}$ can be represented as:

$$\mathbf{A} = \mathbf{P}\begin{bmatrix} \mathbf{J}_1 & & \\ & \ddots & \\ & & \mathbf{J}_m \end{bmatrix}\mathbf{P}^{-1} \tag{20}$$

where the Jordan block $\mathbf{J}_1$ is given by:

$$\mathbf{J}_1 = \begin{bmatrix} 0 & 1 & & & \\ & 0 & 1 & & \\ & & 0 & \ddots & \\ & & & 0 & 1 \\ & & & & 0 \end{bmatrix}_{m\times m} \tag{21}$$

For any $\epsilon > 0$, we construct a matrix:

$$\mathbf{B} = \mathbf{A} + \mathbf{P}\begin{bmatrix} \epsilon_1 & & \\ & \ddots & \\ & & \epsilon_n \end{bmatrix}\mathbf{P}^{-1} \tag{22}$$

where $0 < \epsilon_i < \epsilon$, and $\epsilon_i \neq \epsilon_j$ for $i \neq j$. It is clear that $\mathbf{B}$ has non-zero eigenvalues, making $\mathbf{B}$ an invertible matrix, and $\mathbf{B}$ is within the $\epsilon$-ball around $\mathbf{A}$.

Next, we prove that $U$ is an open set. This proof is almost identical to the one above. Take any invertible matrix $\mathbf{A} \in U$, and let its characteristic polynomial be as that of (18). For an $\epsilon$-ball $O(\mathbf{A}, \epsilon)$ around $\mathbf{A}$, consider any matrix $\mathbf{B} \in O(\mathbf{A}, \epsilon)$ with the characteristic equation as that of (19). As $\epsilon$ becomes sufficiently small, $f_i(\mathbf{A})$ and $f_i(\mathbf{B})$ become arbitrarily close. This implies that the eigenvalues of $\mathbf{B}$ approach those of $\mathbf{A}$, and since $\mathbf{A}$ has non-zero eigenvalues, there exists a sufficiently small $\epsilon$ such that the eigenvalues of $\mathbf{B}$ are also non-zero, making $O(\mathbf{A}, \epsilon) \subset U$. This completes the proof that $U$ is an open set.

The two Lemmas above reveal an essential fact: in practical engineering applications, encountered $n \times n$ matrices are almost always diagonalizable and invertible. This greatly simplifies engineering practice!

Let us return to the attention mechanism: $Attention(\mathbf{X}) = \left(\mathbf{X}\mathbf{A}\mathbf{X}^T\right)\mathbf{V}$. Based on the previous analysis, since the matrix $\mathbf{W}$ is square, we can confidently state that $\mathbf{A}$ is almost always diagonalizable and invertible. With this in mind, we can assume that

$$\mathbf{A} = \begin{bmatrix} a_1 & 0 & \cdots & 0 \\ 0 & a_2 & \cdots & 0 \\ \vdots & \vdots & \vdots & \vdots \\ 0 & 0 & \cdots & a_n \end{bmatrix} \tag{23}$$

where $a_i \neq 0 (i = 1, \ldots, n)$. Taking $a_i = 1 (i = 1, \ldots, n)$ in particular, we now propose a simplified and innovative attention mechanism as follows:

$$Attention(\mathbf{X}) = \left(\mathbf{X}\mathbf{X}^T\right)\mathbf{V}. \tag{24}$$

Compare with the original attention mechanism in [2], clearly, the proposed one is much simpler which contains no parameters in its bilinear mapping. Next, we will use this attention function to establish a simplified transformer artificial neural network.

## 4. The proposed simplified transformer

Using the proposed simplified attention mechanism, we introduce an attention module as illustrated in Fig. 5. This module incorporates both bilinear and linear mappings, along with a residual connection and normalization.

Compared to the original attention module proposed in [2], the computation for the attention module is very simple. The input data $\mathbf{X}$ undergoes a bilinear mapping to generate the dot product $\mathbf{X}\mathbf{X}^T$. Simultaneously, the input data $\mathbf{X}$ undergoes a linear mapping to produce a vector $\mathbf{V} = \mathbf{X}\mathbf{W}$. The result of $\mathbf{X}\mathbf{X}^T$ multiplied by $\mathbf{V}$ is then passed through a residual connection, followed by a layer normalization step, resulting in the output for the attention module. It should be noted

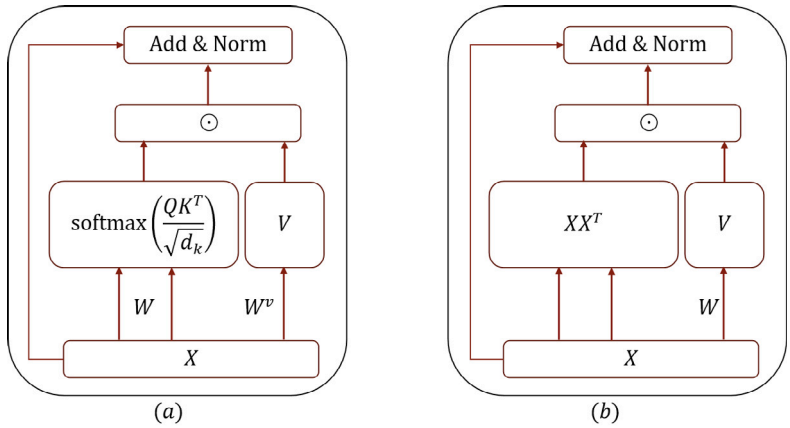


**Fig. 5.** Illustration of the original attention module (a) and the proposed simplified attention module (b). It is evident that the proposed module is considerably simpler than the original counterpart.

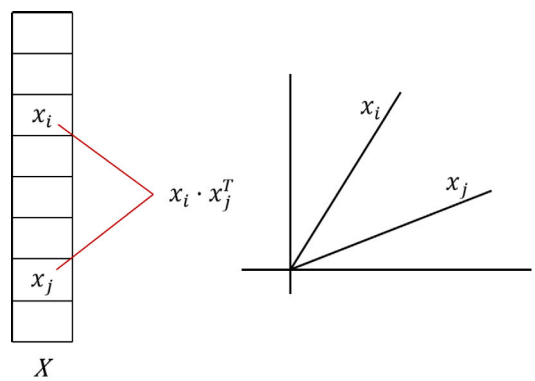


**Fig. 6.** Illustration of the identity matrix. $x_i$ and $x_j^T$ represent different parts of the weighted input, and $x_i \cdot x_j^T$ can be regarded as the similarity score between the inputs $x_i$ and $x_j$.

that the computations for the linear and bilinear mappings are parallel. Nevertheless, the computation is much more efficient.

One of the important features of the attention mechanism is its ability to connect information located in different positions of an input. The proposed attention mechanism achieves this connection by computing the similarity between input vectors $x_i$ and $x_j$, represented as $x_i \cdot x_j^T$. Thus, the matrix $\mathbf{XX}^T$ serves as the attention weighted score of $\mathbf{V}$. Fig. 6 provides an intuitive illustration of this concept.

To further illustrate the function in the proposed attention mechanism, consider an example. Suppose the input data $\mathbf{X}$ and $\mathbf{V}$ are as follows:

$$\mathbf{X} = \begin{bmatrix} a & b \\ c & d \end{bmatrix}, \quad \mathbf{V} = \begin{bmatrix} V_1 \\ V_2 \end{bmatrix}. \tag{25}$$

Then, by (24), the attention mapping can be computed as:

$$Attention(\mathbf{X}) = \begin{bmatrix} (a^2+b^2)V_1, & (ac+bd)V_2 \\ (ac+bd)V_1, & (c^2+d^2)V_2 \end{bmatrix} \tag{26}$$

Clearly, the values $a^2+b^2, ac+bd, ac+bd, c^2+d^2$ can be interpreted as the attention scores.

With the proposed attention module, we formally introduce an efficient simplified Transformer, called *SimplTrans*, as depicted in Fig. 7(a). The *SimplTrans* is constructed by stacking the proposed attention module followed by a softmax layer in the last layer to represent the network's output.

What is special in the *SimplTrans* structure compared to the original one? Most notably, it eliminates the need for **Q** and **K** learning matrices presented in [2], making learning more efficient. Experiments in the next section will confirm this point.

In order to contrast to the state-of-the-art model in image classification based on the Transformer, known as ViT [3], we enhanced the attention block of ViT by integrating the above simplified attention mechanism in lieu of the original attention mechanism in ViT. This leads to another model called *SimplViT*, shown in Fig. 7(b).

## 5. Experimental setup and datasets

All the experiments were conducted using Pytorch 1.13.1 with Python 3.8.6, on an Ubuntu server 18.04.5 LTS with 4 RTX 3090 (24 GB) GPU using CUDA 12.0.

**MNIST.** MNIST [22] consists of handwritten digit images, including digits from 0 to 9. It comprises a total of 60,000 training samples and 10,000 testing samples, and each sample is a grayscale image of size $28 \times 28$.

**CIFAR-10 and CIFAR-100.** CIFAR-10 [23] consists of 10 classes, including 50,000 training images and 10,000 test images and each measuring $32 \times 32$ pixels. CIFAR-100 [23] contains 100 classes, following a similar structure to CIFAR-10, but with 100 classes and each consists of 600 images.

**WMT 2018 EN-CH.** WMT 2018 EN-CH dataset[1] is a bilingual corpus used in the annual Conference on Machine Translation (WMT). It comprises parallel text data in English (EN) and Chinese (CH) and consists of 227 499 sentence pairs. In terms of deduplication, the dataset undergoes a careful process to ensure that the parallel sentences are unique and do not contain redundant information.

[1] https://statmt.org.

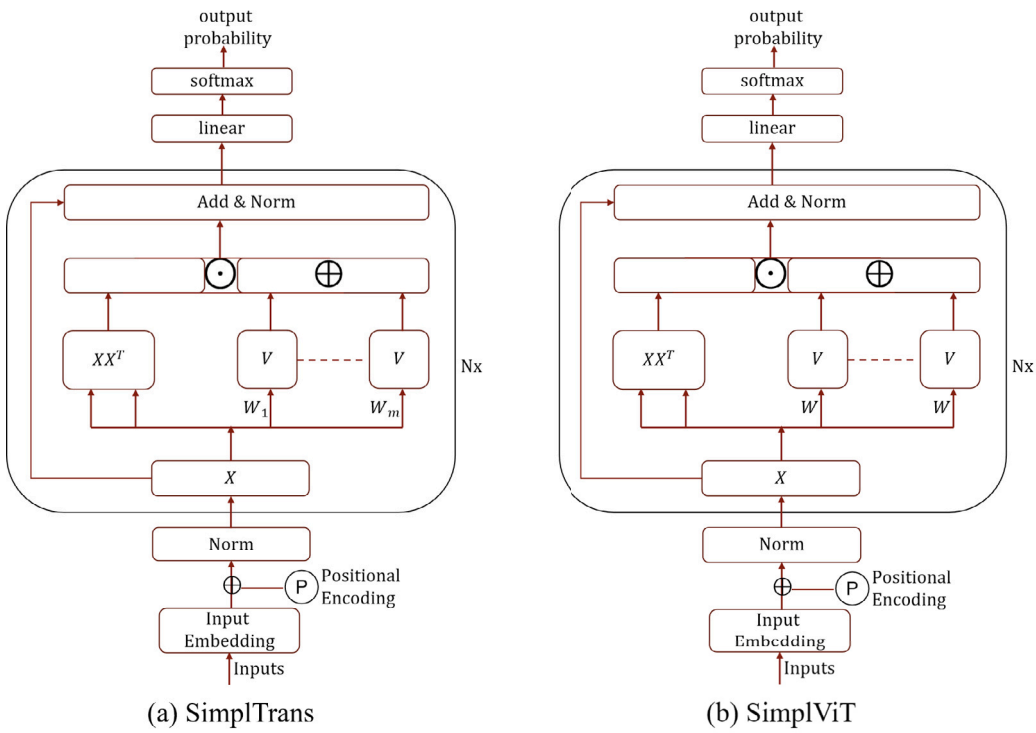


**Fig. 7.** The structure of the proposed *SimplTrans* (a) and *SimplViT (b)* artificial neural network.

**ETT.** Electricity Transformer Temperature (ETT) dataset [11] serves as a crucial indicator for long-term electric power deployment, comprising 2 years of data collected from two distinct counties in China. We utilize the ETTh1, ETTh2, and ETTm1 subsets for our experiments. Each data point includes the target value "oil temperature". The dataset is divided into training, validation, and test sets, with a split of 12/4/4 months, respectively.

## 6. Ablation study

### 6.1. Theoretical analysis

The pseudocode descriptions of our simplified attention and the original attention are provided below:

**Algorithm 1** Simplified attention block computing algorithm

**Input:** data $\mathbf{X}$
**Initialize:** parameter $\mathbf{W}$
Compute $\mathbf{QK} = \mathbf{XX}^T$
Compute $\mathbf{V} = \mathbf{XW}$
**Output:** $LayerNorm(\mathbf{X} + \mathbf{QK} \cdot \mathbf{V})$

As evident from the algorithm, the computation steps of the simplified attention are fewer than those of the original attention. The simplified attention involves only 3 matrix multiplications and its parameter count is $\frac{1}{3}$ of that in original attention, which is summarized in Table 1. It is important to highlight that the simplified attention introduced in this research attains an exceptional time complexity of $O(1)$ during key and value computations.

**Algorithm 2** Original attention block computing algorithm

**Input:** data $\mathbf{X}$
**Initialize:** parameters $\mathbf{W^Q}$,$\mathbf{W^K}$,$\mathbf{W^V}$
Compute $\mathbf{Q} = \mathbf{XW^Q}$
Compute $\mathbf{K} = \mathbf{XW^K}$
Compute $\mathbf{QK} = softmax(\frac{\mathbf{QK}^T}{\sqrt{d_k}})$
Compute $\mathbf{V} = \mathbf{XW^V}$
**Output:** $LayerNorm(\mathbf{X} + \mathbf{QK} \cdot \mathbf{V})$

**Table 1**
Number of matrix multiplications and parameters for simplified attention and original attention. $n$ denotes the sequence length, $d$ denotes the representation dimension.

| Layer type | Matrix multiplications | Parameters |
|---|---|---|
| Original attention | 5 | $3 \cdot n \cdot d$ |
| **Simplified attention (Ours)** | 3 | $n \cdot d$ |

### 6.2. Ablation experiment

We performed an ablation experiment on the MNIST dataset. We trained 100 epochs and the batch size was 1024, using the Adam optimizer with a learning rate of 0.001. Three metrics, namely accuracy, parameters, and floating-point Operations (FLOPs) are used to evaluate the model's performance, which are widely used to evaluate performance on this kind of tasks [24–26]. Results are summarized in Table 2. Under identical experimental conditions, the proposed simplified attention block achieves higher accuracy than the original attention block while utilizing fewer parameters and FLOPs. To maintain clarity in our findings, we limited the number of layers compared, enabling more relevant and interpretable insights into the performance differences between the simplified and original attention mechanisms. Importantly, even with an increased number of layers, the simplified attention

**Table 2**
We conducted experiments on the MNIST dataset, where we stacked 1, 2, and 3 layers of simplified attention blocks and original attention blocks, respectively. Under identical experimental conditions, the simplified attention block outperformed the original attention block in terms of both accuracy and FPS, while requiring fewer parameters and FLOPs.

| Block | Layer | Accuracy (%) | Parameters (K) | FLOPS (M) |
|---|---|---|---|---|
| Simplified attention | 1 | **97.46** | **624.064** | **0.617** |
| | 2 | **98.12** | **1240.288** | **1.229** |
| | 3 | **98.18** | **1856.512** | **1.840** |
| Original attention | 1 | 96.85 | 1853.376 | 1.791 |
| | 2 | 97.84 | 3698.912 | 3.570 |
| | 3 | 97.94 | 5544.448 | 5.360 |

**Table 3**
Variants of *SimplViT* and ViT.

| Model | layers | Hidden size | MLP size | Heads |
|---|---|---|---|---|
| S | 12 | 192 | 768 | 6 |
| B | 12 | 192 | 768 | 12 |
| L | 12 | 192 | 768 | 16 |

mechanism consistently outperforms the original, demonstrating better performance with fewer parameters and FLOPs. This result highlights the robustness of the simplified attention approach and its scalability potential in more complex neural network architectures.

## 7. Experimental comparison

### 7.1. Image classification

We conducted image classification experiments on the CIFAR-10, and CIFAR-100 datasets, using our *SimplViT* and the original ViT for comparison. We trained 100 epochs and the batch size was 64, using the Adam optimizer [27] with a learning rate of 0.001. Model variants are summarized in Table 3. We focused exclusively on head size due to its critical role in capturing diverse representation patterns and its direct influence on the efficiency of the model's attention mechanism. Although hidden size and MLP size are also significant factors, variations in these parameters tend to have a more stable impact on performance compared to changes in the number of attention heads, as suggested by our preliminary experimental results. Therefore, analyzing the sensitivity of head count offers more immediate insights into the model's adaptability and effectiveness in processing information.

The results, summarized in Table 4, demonstrate *SimplViT*'s clear superiority to ViT in classification accuracy, time complexity, and space complexity under identical hyperparameters. Notably, as shown in Fig. 8, SimplViT's improved classification accuracy is more evident in the CIFAR-100 dataset than in CIFAR-10. This suggests that *SimplViT*'s performance gain is more pronounced with larger-scale datasets, allowing it to fully realize its potential. It is important to emphasize that a careful selection of attention heads and patch size can further enhance *SimplViT*'s model performance. For instance, selecting the B/4 (Base version with a patch size of 4) in SimplViT produces the highest classification accuracy for the CIFAR-10 dataset, whereas opting for the L/4 (Large version with a patch size of 4) in SimplViT results in the highest classification accuracy for the CIFAR-100 dataset. This implies that selecting appropriate numbers of attention heads and patch sizes not only reduces the model's parameter count related to attention computation but also contributes to an overall performance improvement.

We proceeded to generate attention maps for both *SimplViT* and ViT models. Fig. 9 provides a detailed comparison of the attention maps for SimplViT and ViT. On the horizontal axis, the numbers indicate the indices of the attention heads, while the vertical axis corresponds to the layer indices within the models. In the ViT model, the attention heads exhibit a uniform and repetitive pattern across different layers. The attention maps for ViT tend to show a consistent focus on specific spatial features within a single dimension. This suggests that ViT processes visual information in a relatively straightforward manner, concentrating on similar features across multiple layers without significant variation. This uniformity implies that while ViT is effective at capturing certain spatial relationships, it may not fully leverage the multi-dimensional nature of visual data. The repetitive patterns indicate that the model might be reinforcing the same type of information across different layers, potentially limiting its ability to capture more complex dependencies. In contrast, the attention maps for SimplViT reveal a much more varied and complex pattern of attention distribution. The attention heads in SimplViT are not only focusing on spatial features within a single dimension but also integrating information across both horizontal and vertical features. This diversity in attention patterns suggests that SimplViT is capable of capturing a broader range of spatial relationships and dependencies. The variation in how attention is allocated across layers indicates that SimplViT might be processing different types of features or relationships at different stages of the model, which could contribute to a more nuanced understanding of visual information.

### 7.2. Machine translation

We conducted machine translation experiments on the WMT 2018 EN-CH dataset. Sentences were encoded using byte-pair encoding, which has a shared source–target vocabulary of 32 000 tokens. We use our *SimplTrans* and the original Transformer for comparison. The model variants are presented in Table 5. We trained 40 epochs and the batch size was 32, using the Adam optimizer with the learning rate varied over the course of training. The learning rate varied according to the formula:

$$\alpha = d_{model}^{-0.5} \cdot \min\left\{step_num^{-0.5}, step_num \cdot ws^{-1.5}\right\},$$

where $ws$ denotes the warm-up steps. In our experiment, we set $ws = 10\,000$ and $d_{model} = 512$.

The evaluation metrics BLEU, parameters, and FLOPS are measured in the same way as used in [2]. Results are summarized in Table 6. Under the same hyperparameters, *SimplTrans* achieves higher BLEU than Transformer while utilizing fewer parameters and FLOPs. This is explained by the fact that the simplified attention mechanism in SimplTrans not only reduces computational complexity but also improves the model's capacity to focus on the most relevant parts of the input sequence. By eliminating the softmax normalization and using a unified weight matrix, SimplTrans directly computes attention in a more efficient manner. This means that the model can focus on more critical tokens in the sequence with reduced computational overhead. As a result, SimplTrans is able to more effectively capture long-range dependencies, which is crucial for high-quality translations, leading to improved BLEU scores. The reduced number of parameters and FLOPs in SimplTrans means that the model is less prone to overfitting, especially in the smaller and base configurations (S and B). These models achieve significantly higher BLEU scores (e.g., SimplTrans(S) with 22.41 BLEU vs. Transformer(S) with 18.82 BLEU) despite having fewer parameters. The efficiency gains allow SimplTrans to focus on learning the most essential features of the data, improving the quality of translations.

### 7.3. Variable prediction

We further conducted long sequence time-series forecasting experiments on the ETT dataset. We compare SimplTrans with Informer [11], Reformer [10], LogTrans [9], and ARIMA [28]. For SimplTrans, in correspondence to Informer [11], we selected encoder layers from {6, 4, 3, 2}, while fixing the decoder to 2 layers. The multi-head attention mechanism uses either 8 or 16 heads, with an output dimension of 512. Input sequences for the encoder and the decoder's start token were

**Table 4**
We conducted comparative experiments using different variants of *SimplViT* and ViT. Here, S/4 refers to the employment of the small version of the model configuration with a patch size of 4, while L/8 indicates the use of the large version of the model configuration with a patch size of 8. The remaining configurations follow a similar pattern. Under almost all the experimental setups, *SimplViT* outperformed ViT in terms of accuracy, and utilizing fewer parameters and FLOPs.

| Dataset | Model | Accuracy (%) | Parameters (K) | FLOPS (M) |
|---|---|---|---|---|
| CIFAR-10 | *SimplViT*(S/4) | **74.24 ± 0.58** | **930.78** | **59.78** |
| | *SimplViT*(S/8) | **66.66 ± 0.65** | **935.67** | **15.75** |
| | *SimplViT*(B/4) | **74.73 ± 0.73** | **930.78** | **59.78** |
| | *SimplViT*(B/8) | 66.93 ± 0.28 | **935.67** | **15.75** |
| | *SimplViT*(L/4) | **74.66 ± 0.52** | **930.78** | **59.78** |
| | *SimplViT*(L/8) | **68.58 ± 0.88** | **935.67** | **15.75** |
| | ViT(S/4) | 72.97 ± 0.89 | 959.00 | 62.48 |
| | ViT(S/8) | 64.89 ± 0.34 | 963.90 | 16.28 |
| | ViT(B/4) | 72.77 ± 0.40 | 1014.30 | 66.98 |
| | ViT(B/8) | **67.11 ± 0.63** | 1019.19 | 17.28 |
| | ViT(L/4) | 72.48 ± 0.87 | 1051.16 | 69.99 |
| | ViT(L/8) | 68.41 ± 0.21 | 1056.06 | 17.95 |
| CIFAR-100 | *SimplViT*(S/4) | **42.68 ± 0.52** | **930.78** | **59.78** |
| | *SimplViT*(S/8) | **36.55 ± 1.47** | **935.67** | **15.75** |
| | *SimplViT*(B/4) | **44.01 ± 1.46** | **930.78** | **59.78** |
| | *SimplViT*(B/8) | **36.47 ± 3.49** | **935.67** | **15.75** |
| | *SimplViT*(L/4) | **43.63 ± 1.34** | **930.78** | **59.78** |
| | *SimplViT*(L/8) | **37.21 ± 2.87** | **935.67** | **15.75** |
| | ViT(S/4) | 41.71 ± 0.34 | 959.00 | 62.48 |
| | ViT(S/8) | 36.42 ± 2.53 | 963.90 | 16.28 |
| | ViT(B/4) | 43.39 ± 0.98 | 1014.30 | 66.98 |
| | ViT(B/8) | 36.10 ± 3.57 | 1019.19 | 17.28 |
| | ViT(L/4) | 41.81 ± 1.41 | 1051.16 | 69.99 |
| | ViT(L/8) | 35.48 ± 4.21 | 1056.06 | 17.95 |

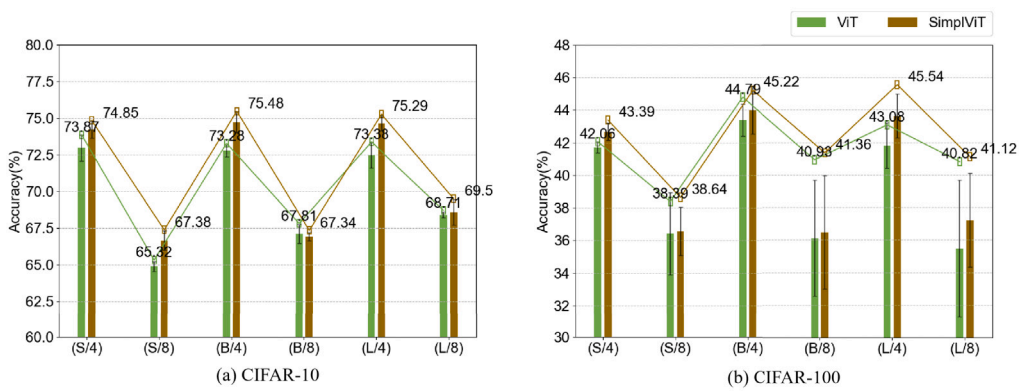


**Fig. 8.** Test accuracy for ViT and *SimplViT*. In the figure, the mean value, standard deviation, and highest accuracy (number) in several experiments are calculated. Where, (a) CIFAR-10, (b) CIFAR-100, and the horizontal axis are shaped like (S/4), representing different number of heads and different patch size.

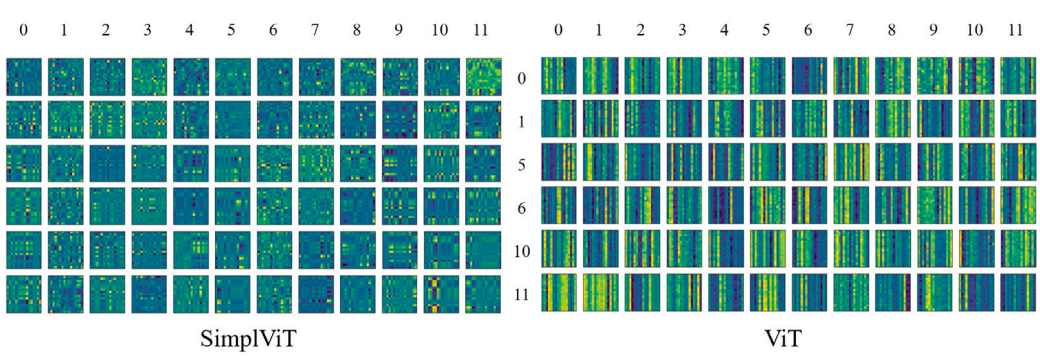


**Fig. 9.** Attention Map of the *SimplViT* and the ViT. The numbers on the horizontal axis represent the indices of the attention heads, while the numbers on the vertical axis correspond to the layer indices. In comparison to the attention map of ViT, the attention map of *SimplViT* integrates both horizontal and vertical features, exhibiting a greater diversity compared to ViT.

chosen from {24, 48, 96, 168, 336, 480, 720}. We employed the Adam optimizer, starting with a learning rate of $1e^{-4}$, which was halved after each epoch. Training was carried out over 8 epochs with early stopping applied as needed.

**Table 5**
Variants of *SimplTrans* and Transformer. The meaning of each parameter is consistent with that described in [2].

| Model | $N$ | $d_{model}$ | $d_{ff}$ | $h$ | $d_k$ | $d_v$ | $P_{drop}$ |
|---|---|---|---|---|---|---|---|
| S | 4 | 1024 | 512 | 4 | 16 | 16 | 0.1 |
| B | 6 | 1024 | 1024 | 8 | 32 | 32 | 0.1 |
| L | 6 | 1024 | 4096 | 16 | 64 | 64 | 0.1 |

**Table 6**
The *SimplTrans* achieves better BLEU scores than Transformer on WMT 2018 Chinese–English dataset, while utilizing fewer parameters and FLOPs.

| Model | BLEU | Parameters (K) | FLOPS (M) |
|---|---|---|---|
| *SimplTrans*(S) | **22.41** | **32 804** | **47 616** |
| *SimplTrans*(B) | **24.44** | **61 500** | **89 280** |
| *SimplTrans*(L) | **24.58** | **135 264** | **196 416** |
| Transformer(S) | 18.82 | 57 404 | 83 328 |
| Transformer(B) | 15.48 | 98 400 | 142 848 |
| Transformer(L) | 21.08 | 172 164 | 249 984 |

Evaluation metrics include Mean Squared Error (MSE) and Mean Absolute Error (MAE), which are commonly employed to assess the accuracy and robustness of predictive models across diverse applications. Across all datasets and horizons, SimplTrans achieves the best results in 9 out of 12 scenarios, as indicated in the "Count" row in Table 7. This demonstrates the method's consistency and reliability compared to other approaches.

In long-sequence time-series forecasting tasks, traditional transformers face challenges: memory and computation bottlenecks. As the sequence length increases, the time complexity of traditional transformers grows quadratically ($O(N^2)$), leading to excessive computational and memory demands. Even recent sparsity-based transformers like Informer [11] and Reformer [10] reduce computation by approximating the attention matrix, but they still rely on some form of matrix operations involving queries, keys, and values, which do not fully resolve the issue of growing computational cost as sequence length increases. SimplTrans, by reducing the complexity to $O(N)$, alleviates the bottleneck for long-sequence computations. When generalized to the larger ETT dataset, SimplTrans can process longer time spans effectively. Despite simplifying the attention mechanism, SimplTrans does not sacrifice prediction accuracy. The reduced computational cost does not result in a loss of the model's capacity to capture long-range dependencies in the data. Instead, the simplified attention mechanism enhances the model's ability to focus on important patterns, even in long sequences, and avoids overfitting to noise that can occur in more complex models with excessive parameters.

## 8. Discussion

The implications of SimplTrans extend beyond its immediate applications in specific tasks. The simplified attention mechanism may enable its use in broader fields, such as reinforcement learning, natural language processing, and sequence generation. In reinforcement learning, where efficiency and scalability are critical, SimplTrans' lightweight structure could be particularly useful in high-dimensional state spaces or in applications requiring quick decision-making, such as robotics or autonomous systems. In natural language processing tasks, efficient attention mechanisms can enhance real-time applications such as speech recognition, chatbots, and document summarization by enabling faster processing of lengthy text inputs. SimplTrans could be particularly beneficial in low-resource settings where computational constraints are significant. Similarly, in sequence generation tasks, SimplTrans's ability to capture long-range dependencies efficiently can improve fluency and coherence while maintaining scalability. The model's ability to identify and focus on crucial patterns without excessive parameterization suggests potential for improved generalization in generative AI applications.

## 9. Conclusion

Leveraging two crucial observations that establish the diagonalizability and invertibility of almost all square matrices, this paper introduces a straightforward attention mechanism that employs bilinear mapping without the need for additional parameters. We present a modified Transformer, referred to as *SimplTrans*, which incorporates this innovative attention mechanism. The *SimplTrans* integrates both linear and bilinear mappings within each layer. When compared to the original Transformer, the *SimplTrans* offers a very simplified structure and several significant advantages: firstly, it drastically reduces the number of learning parameters by eliminating certain parameter matrices found in the original Transformer; secondly, it enhances the efficiency of forward computation; and most importantly, it accelerates the learning process. Experimental results demonstrate that the proposed *SimplTrans* network achieves state-of-the-art performance across various tasks. Further research is necessary to explore the impact of SimplTrans on large-scale, multi-modal datasets encompassing text, images, and video, as this remains an open area of exploration.

**Table 7**
Univariate long sequence time-series forecasting results on the Electricity Transformer Temperature (ETT) dataset. Informer† denotes the canonical self-attention variant of Informer. The best results are highlighted in **bold**.

| Methods | | SimplTrans | | Informer | | Informer† | | LogTrans | | Reformer | | ARIMA | |
|---|---|---|---|---|---|---|---|---|---|---|---|---|---|
| Metrics | | MSE | MAE | MSE | MAE | MSE | MAE | MSE | MAE | MSE | MAE | MSE | MAE |
| $ETTh_1$ | 24 | **0.071** | **0.211** | 0.098[a] | 0.247[a] | 0.092[a] | 0.246[a] | 0.103[a] | 0.259[a] | 0.222[a] | 0.389[a] | 0.108[a] | 0.284[a] |
| | 48 | **0.119** | **0.284** | 0.158[a] | 0.319[a] | 0.161[a] | 0.322[a] | 0.167[a] | 0.328[a] | 0.284[a] | 0.445[a] | 0.175[a] | 0.424[a] |
| | 168 | 0.340 | 0.519 | **0.183**[a] | **0.346**[a] | 0.187[a] | 0.355[a] | 0.207[a] | 0.375[a] | 1.522[a] | 1.191[a] | 0.396[a] | 0.504[a] |
| | 336 | **0.196** | **0.364** | 0.222[a] | 0.387[a] | 0.215[a] | 0.369[a] | 0.230[a] | 0.398[a] | 1.680[a] | 1.124[a] | 0.468[a] | 0.593[a] |
| $ETTh_2$ | 24 | **0.073** | **0.204** | 0.093[a] | 0.240[a] | 0.099[a] | 0.241[a] | 0.102[a] | 0.255[a] | 0.263[a] | 0.437[a] | 3.554[a] | 0.445[a] |
| | 48 | **0.117** | **0.266** | 0.155[a] | 0.314[a] | 0.159[a] | 0.317[a] | 0.169[a] | 0.348[a] | 0.458[a] | 0.545[a] | 3.190[a] | 0.474[a] |
| | 168 | 0.278 | 0.436 | **0.232**[a] | **0.389**[a] | 0.235[a] | 0.390[a] | 0.246[a] | 0.422[a] | 1.029[a] | 0.879[a] | 2.800[a] | 0.595[a] |
| | 336 | 0.270 | 0.424 | 0.263[a] | **0.417**[a] | **0.258**[a] | 0.423[a] | 0.267[a] | 0.437[a] | 1.668[a] | 1.228[a] | 2.753[a] | 0.738[a] |
| $ETTm_1$ | 24 | **0.018** | **0.101** | 0.030[a] | 0.137[a] | 0.034[a] | 0.160[a] | 0.065[a] | 0.202[a] | 0.095[a] | 0.228[a] | 0.090[a] | 0.206[a] |
| | 48 | **0.045** | **0.168** | 0.069[a] | 0.203[a] | 0.066[a] | 0.194[a] | 0.078[a] | 0.220[a] | 0.249[a] | 0.390[a] | 0.179[a] | 0.306[a] |
| | 96 | **0.135** | **0.311** | 0.194[a] | 0.372[a] | 0.187[a] | 0.384[a] | 0.199[a] | 0.386[a] | 0.920[a] | 0.767[a] | 0.272[a] | 0.399[a] |
| | 288 | **0.281** | **0.458** | 0.401[a] | 0.554[a] | 0.409[a] | 0.548[a] | 0.411[a] | 0.572[a] | 1.108[a] | 1.245[a] | 0.462[a] | 0.558[a] |
| Count | | **9** | **9** | 2 | 3 | 1 | 0 | 0 | 0 | 0 | 0 | 0 | 0 |

[a] Denotes results taken from [11].

## CRediT authorship contribution statement

**Lei Xu:** Writing – original draft, Methodology, Conceptualization. **Haiying Luo:** Visualization, Validation, Methodology. **Zhang Yi:** Writing – review & editing, Supervision, Methodology.

## Declaration of competing interest

The authors declare that they have no conflict of interest.

## Acknowledgments

This work was supported by the Major Program of the National Natural Science Foundation of China under Grant No. 62495064 and the Youth Program of the National Natural Science Foundation of China under Grant No. 62406208.

## Data availability

Data will be made available on request.

## References

[1] Marvin Minsky, Seymour Papert, An Introduction to Computational Geometry, 1969.
[2] Ashish Vaswani, Noam Shazeer, Niki Parmar, Jakob Uszkoreit, Llion Jones, Aidan N. Gomez, Łukasz Kaiser, Illia Polosukhin, Attention is all you need, Adv. Neural Inf. Process. Syst. 30 (2017).
[3] Alexey Dosovitskiy, Lucas Beyer, Alexander Kolesnikov, Dirk Weissenborn, Xiaohua Zhai, Thomas Unterthiner, Mostafa Dehghani, Matthias Minderer, Georg Heigold, Sylvain Gelly, Jakob Uszkoreit, Neil Houlsby, An image is worth 16x16 words: Transformers for image recognition at scale, 2020, ArXiv, abs/2010.11929. https://api.semanticscholar.org/CorpusID:225039882.
[4] Yujun Ma, Ruili Wang, Ming Zong, Wanting Ji, Yi Wang, Baoliu Ye, Convolutional transformer network for fine-grained action recognition, Neurocomputing 569 (2024) 127027.
[5] Zhifu Zhao, Ziwei Chen, Jianan Li, Xuemei Xie, Kai Chen, Xiaotian Wang, Guangming Shi, STDM-transformer: Space–time dual multi-scale transformer network for skeleton-based action recognition, Neurocomputing 563 (2024) 126903.
[6] Zhenyu Li, Pengjie Xu, CSPFormer: A cross-spatial pyramid transformer for visual place recognition, Neurocomputing (2024) 127472.
[7] Krisna Pinasthika, Blessius Sheldo Putra Laksono, Riyandi Banovbi Putera Irsal, Novanto Yudistira, et al., SparseSwin: Swin transformer with sparse transformer block, Neurocomputing (2024) 127433.
[8] Rewon Child, Scott Gray, Alec Radford, Ilya Sutskever, Generating long sequences with sparse transformers, 2019, arXiv preprint arXiv:1904.10509.
[9] Shiyang Li, et al., Enhancing the locality and breaking the memory bottleneck of transformer on time series forecasting, Adv. Neural Inf. Process. Syst. 32 (2019).
[10] Nikita Kitaev, Łukasz Kaiser, Anselm Levskaya, Reformer: The efficient transformer, 2020, arXiv preprint arXiv:2001.04451.
[11] Haoyi Zhou, Shanghang Zhang, Jieqi Peng, Shuai Zhang, Jianxin Li, Hui Xiong, Wancai Zhang, Informer: Beyond efficient transformer for long sequence time-series forecasting, in: Proceedings of the AAAI Conference on Artificial Intelligence, Vol. 35, 2021, pp. 11106–11115.
[12] Sinong Wang, Belinda Z. Li, Madian Khabsa, Han Fang, Hao Ma, Linformer: Self-attention with linear complexity, 2020, arXiv preprint arXiv:2006.04768.
[13] Angelos Katharopoulos, Apoorv Vyas, Nikolaos Pappas, François Fleuret, Transformers are rnns: Fast autoregressive transformers with linear attention, in: International Conference on Machine Learning, 2020, pp. 5156–5165.
[14] Krzysztof Choromanski, Valerii Likhosherstov, David Dohan, Xingyou Song, Andreea Gane, Tamas Sarlos, Peter Hawkins, Jared Davis, David Belanger, Lucy Colwell, et al., Masked language modeling for proteins via linearly scalable long-context transformers, 2020, arXiv preprint arXiv:2006.03555.
[15] Andrew Jaegle, Felix Gimeno, Andy Brock, Oriol Vinyals, Andrew Zisserman, Joao Carreira, Perceiver: General perception with iterative attention, in: International Conference on Machine Learning, 2021, pp. 4651–4664.
[16] Zhen Qin, Dong Li, Weigao Sun, Weixuan Sun, Xuyang Shen, Xiaodong Han, Yunshen Wei, Baohong Lv, Fei Yuan, Xiao Luo, Y. Qiao, Yiran Zhong, Scaling TransNormer to 175 billion parameters, 2023, ArXiv, abs/2307.14995. https://api.semanticscholar.org/CorpusID:260203124.
[17] Jiachen Lu, Jinghan Yao, Junge Zhang, Xiatian Zhu, Hang Xu, Weiguo Gao, Chunjing Xu, Tao Xiang, Li Zhang, Soft: Softmax-free transformer with linear complexity, Adv. Neural Inf. Process. Syst. 34 (2021) 21297–21309.
[18] Jeonggeun Song, Heung-Chang Lee, X-vit: High performance linear vision transformer without softmax, 2022, arXiv preprint arXiv:2205.13805.
[19] Jeong-geun Song, Ufo-vit: High performance linear vision transformer without softmax, 2021, arXiv preprint arXiv:2109.14382.
[20] Jeonggeun Song, Heung-Chang Lee, Vibid: Linear vision transformer with bidirectional normalization, in: Uncertainty in Artificial Intelligence, 2023, pp. 1996–2005.
[21] Morris W. Hirsch, Stephen Smale, Robert L. Devaney, Differential Equations, Dynamical Systems, and an Introduction to Chaos, 2013.
[22] Yann LeCun, Léon Bottou, Yoshua Bengio, Patrick Haffner, Gradient-based learning applied to document recognition, Proc. IEEE 86 (1998) 2278–2324, https://api.semanticscholar.org/CorpusID:14542261.
[23] Alex Krizhevsky, Learning multiple layers of features from tiny images, 2009, https://api.semanticscholar.org/CorpusID:18268744.
[24] Nicolas Carion, Francisco Massa, Gabriel Synnaeve, Nicolas Usunier, Alexander Kirillov, Sergey Zagoruyko, End-to-end object detection with transformers, 2020, ArXiv, abs/2005.12872. https://api.semanticscholar.org/CorpusID:218889832.
[25] Xizhou Zhu, Weijie Su, Lewei Lu, Bin Li, Jifeng Dai, Deformable DETR: Deformable transformers for end-to-end object detection, 2020.
[26] Byungseok Roh, Jae Woong Shin, Wuhyun Shin, Saehoon Kim, Sparse DETR: Efficient end-to-end object detection with learnable sparsity, 2021, arXiv e-prints.
[27] Diederik P. Kingma, Jimmy Ba, Adam: A method for stochastic optimization, 2006, CoRR, abs/1412.6980. https://api.semanticscholar.org/CorpusID:6628106.
[28] Adebiyi A. Ariyo, Adewumi O. Adewumi, Charles K. Ayo, Stock price prediction using the ARIMA model, in: 2014 UKSim-AMSS 16th International Conference on Computer Modelling and Simulation, IEEE, 2014.

**Lei Xu** received her Ph.D. degree in computer science from the Sichuan University in 2023. She is currently a Post-Doctoral Research Fellow in Machine Intelligence Laboratory at College of Computer Science, Sichuan University, Chengdu, China. Her research interest covers artificial intelligence, deep neural network, image guided surgery, medical image processing and analysis.

**Haiying Luo** is currently pursuing the Ph.D. degree with the Machine Intelligence Laboratory, College of Computer Science, Sichuan University, Chengdu, China. His research interest is deep learning, focusing on the theoretical research and application of artificial intelligence algorithms.

**Zhang Yi** received a Ph.D. degree in mathematics from the Institute of Mathematics, The Chinese Academy of Science, Beijing, China, in 1994. He is the Founder of the Machine Intelligence Laboratory, Sichuan University, Chengdu, China. He is the co-author of four books: Convergence Analysis of Recurrent Neural Networks (Kluwer Academic Publishers, 2004), Neural Networks: Computational Models and Applications (Springer, 2007), Subspace Learning of Neural Networks (CRC Press, 2010), and Intelligent Analysis of Fundus Images: Methods and Applications (World Scientific, 2023).