中山大學 SUN YAT-SEN UNIVERSITY

国家超级计算广州中心 NATIONAL SUPERCOMPUTER CENTER IN GUANGZHOU

用OpenMP进行共享内存编程

任课教师：黄聃

Roadmap

- Writing programs that use OpenMP.
- Using OpenMP to parallelize many serial for loops with only small changes to the source code.
- Task parallelism.
- Explicit thread synchronization.
- Standard problems in shared-memory programming.

OpenMP

- An API for shared-memory parallel programming.
- MP = **multiprocessing**
- Designed for systems in which each thread or process can potentially have access to all available memory.
- **System** is viewed as a collection of cores or CPU's, all of which have access to main memory.

A shared memory system

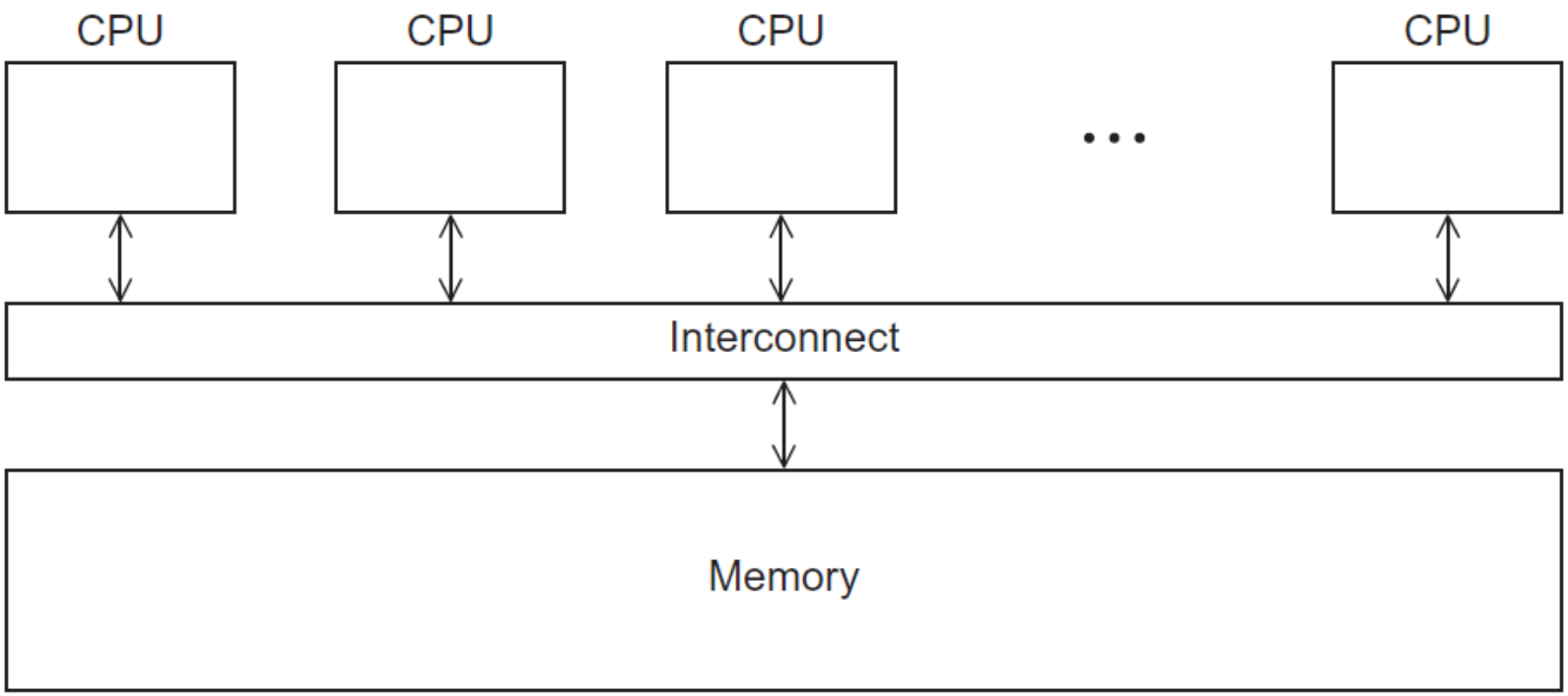

Pragmas

- Special preprocessor instructions.
- Typically added to a system to allow behaviors that **aren't part** of the basic C specification.
- Compilers that don't support the pragmas ignore them.

#pragma

```c
#include <stdio.h>
#include <stdlib.h>
#include <omp.h>

void Hello(void);  /* Thread function */

int main(int argc, char* argv[]) {
   /* Get number of threads from command line */
   int thread_count = strtol(argv[1], NULL, 10);

#  pragma omp parallel num_threads(thread_count)
   Hello();

   return 0;
}  /* main */

void Hello(void) {
   int my_rank = omp_get_thread_num();
   int thread_count = omp_get_num_threads();

   printf("Hello from thread %d of %d\n", my_rank, thread_count);

}  /* Hello */
```

```
gcc -g -Wall -fopenmp -o omp_hello omp_hello.c
```

```
./omp_hello 4
```

compiling

running with 4 threads

possible outcomes

Hello from thread 0 of 4
Hello from thread 1 of 4
Hello from thread 2 of 4
Hello from thread 3 of 4

Hello from thread 1 of 4
Hello from thread 2 of 4
Hello from thread 0 of 4
Hello from thread 3 of 4

Hello from thread 3 of 4
Hello from thread 1 of 4
Hello from thread 2 of 4
Hello from thread 0 of 4

OpenMp pragmas

- # pragma omp parallel

- Most basic parallel directive（指令）.

- The number of threads that run the following structured block of code is determined by the run-time system.

A process forking and joining two threads

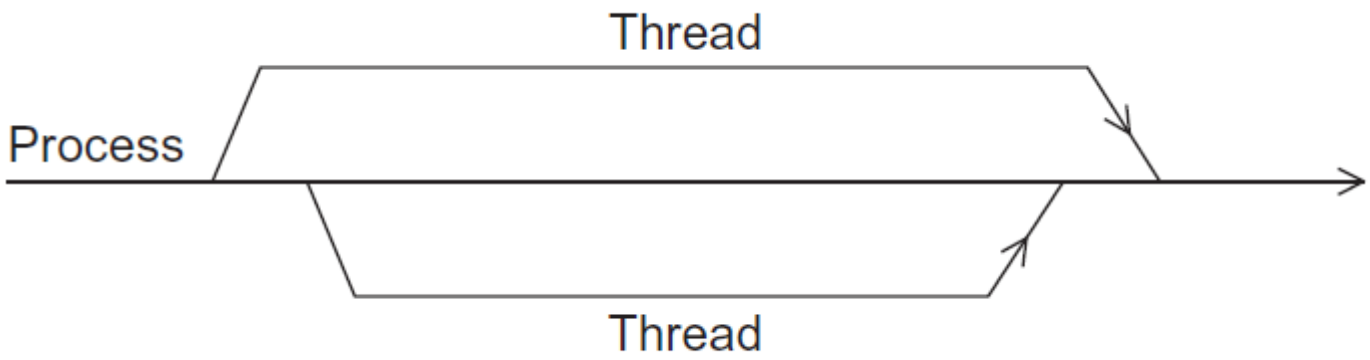

Clause（子句）

- Text that modifies a directive.
- The num_threads clause can be added to a parallel directive.
- It allows the programmer to specify the number of threads that should execute the following block.

```
# pragma omp parallel num_threads ( thread_count )
```

Of note…

- There may be system-defined limitations on the number of threads that a program can start.
- The OpenMP standard doesn't guarantee that this will actually start thread_count threads.
- Most current systems can start hundreds or even thousands of threads.
- Unless we're trying to start a lot of threads, we will almost always get the desired number of threads.

Some terminology

- The collection of threads executing the parallel block is called a team
- the original thread is called the master, and the additional threads are called slaves.

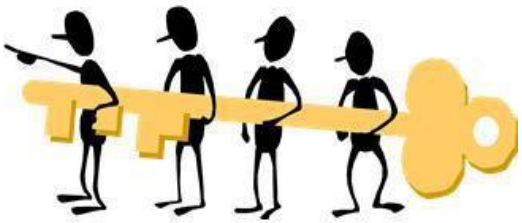

In case the compiler doesn't support OpenMP

```
# include <omp.h>
```

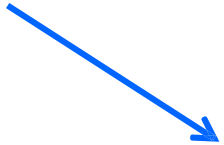

```
#ifdef _OPENMP
# include <omp.h>
#endif
```

In case the compiler doesn't support OpenMP

```
# ifdef _OPENMP
  int my_rank = omp_get_thread_num ( );
  int thread_count = omp_get_num_threads ( );
# else
  int my_rank = 0;
  int thread_count = 1;
# endif
```

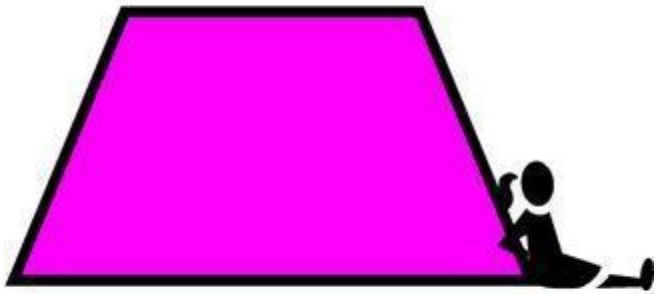

The Trapezoidal Rule

The trapezoidal rule

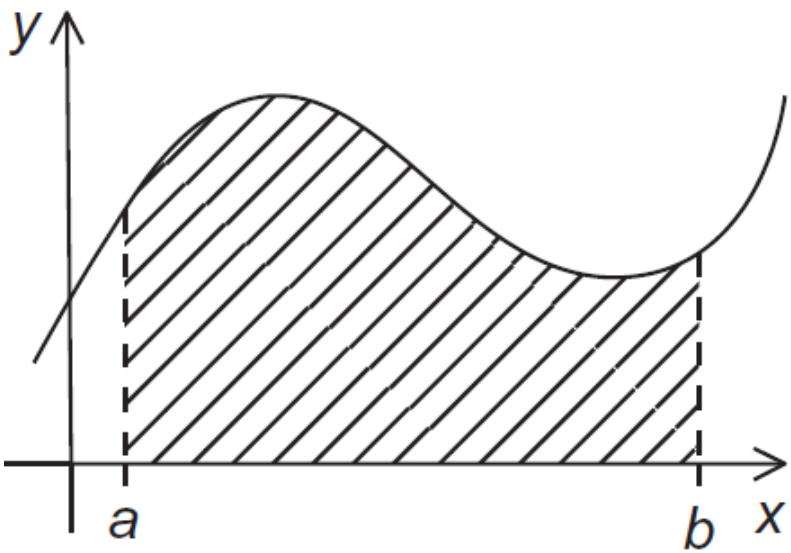

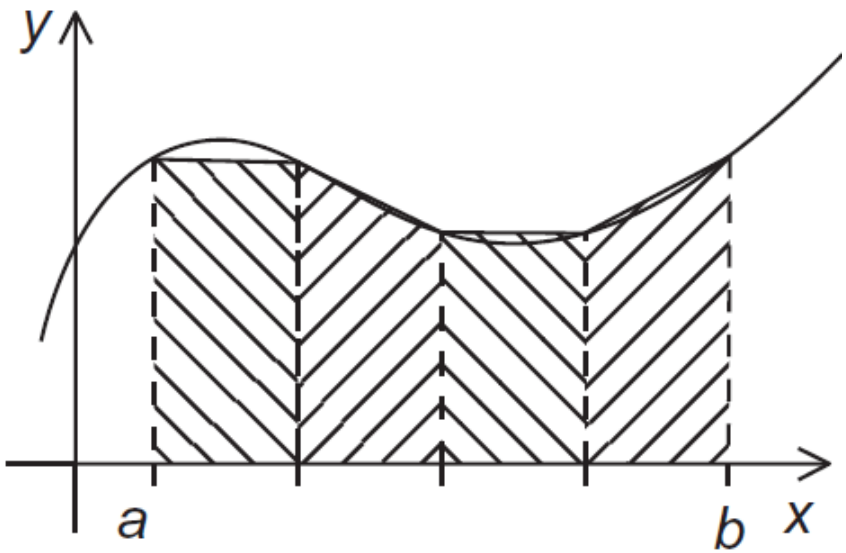

Serial algorithm

$$\text{Sum of trapezoid areas } = h[f(x_0)/2 + f(x_1) + f(x_2) + \cdots + f(x_{n-1}) + f(x_n)/2]$$

```
/* Input: a, b, n */
h = (b-a)/n;
approx = (f(a) + f(b))/2.0;
for (i = 1; i <= n-1; i++) {
    x_i = a + i*h;
    approx += f(x_i);
}
approx = h*approx;
```

A First OpenMP Version

1)We identified two types of tasks:

a) computation of the areas of individual trapezoids

b) adding the areas of trapezoids.

2)There is no communication among the tasks in the first collection, but each task in the first collection communicates with task 1b.

A First OpenMP Version

3) We assumed that there would be many more trapezoids than cores.

So we aggregated tasks by assigning a contiguous block of trapezoids to each thread (and a single thread to each core).

Assignment of trapezoids to threads

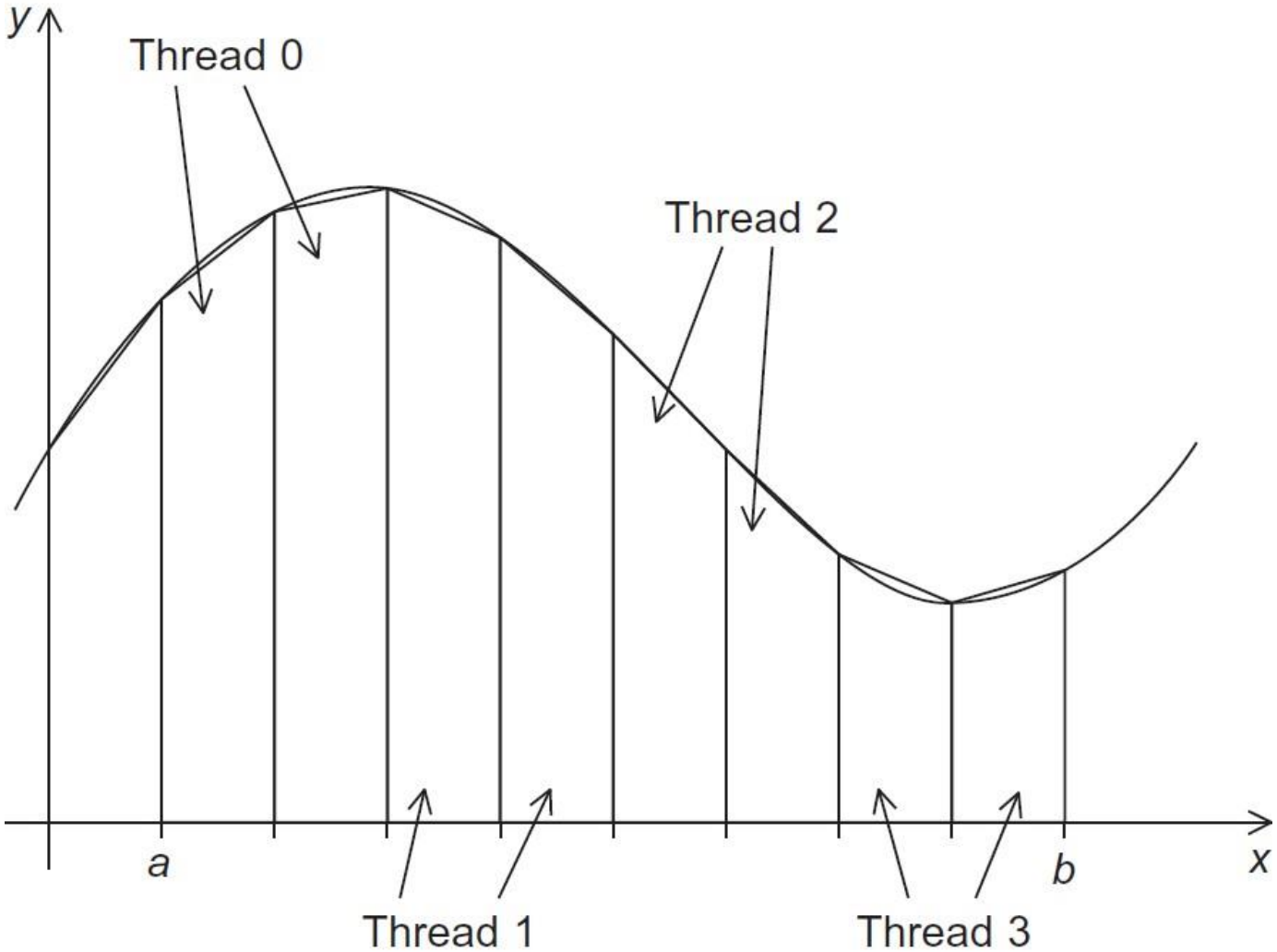

Time	Thread 0	Thread 1
0	`global_result = 0` to register	finish `my_result`
1	`my_result = 1` to register	`global_result = 0` to register
2	add `my_result` to `global_result`	`my_result = 2` to register
3	store `global_result = 1`	add `my_result` to `global_result`
4		store `global_result = 2`

Unpredictable results when two (or more) threads attempt to simultaneously execute:

global_result += my_result ;

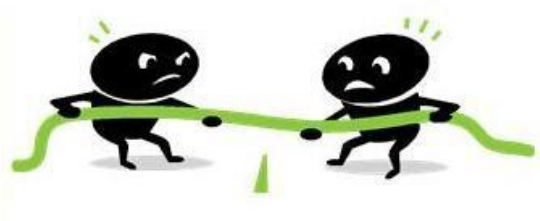

Mutual exclusion

```
# pragma omp critical
  global_result += my_result ;
```

only one thread can execute

the following structured block at a time

```c
#include <stdio.h>
#include <stdlib.h>
#include <omp.h>

void Trap(double a, double b, int n, double* global_result_p);

int main(int argc, char* argv[]) {
   double  global_result = 0.0;  /* Store result in global_result */
   double  a, b;                 /* Left and right endpoints      */
   int     n;                    /* Total number of trapezoids    */
   int     thread_count;

   thread_count = strtol(argv[1], NULL, 10);
   printf("Enter a, b, and n\n");
   scanf("%lf %lf %d", &a, &b, &n);
#  pragma omp parallel num_threads(thread_count)
   Trap(a, b, n, &global_result);

   printf("With n = %d trapezoids, our estimate\n", n);
   printf("of the integral from %f to %f = %.14e\n",
      a, b, global_result);
   return 0;
}  /* main */
```

```
void Trap(double a, double b, int n, double* global_result_p) {
   double  h, x, my_result;
   double  local_a, local_b;
   int  i, local_n;
   int my_rank = omp_get_thread_num();
   int thread_count = omp_get_num_threads();

   h = (b-a)/n;
   local_n = n/thread_count;
   local_a = a + my_rank*local_n*h;
   local_b = local_a + local_n*h;
   my_result = (f(local_a) + f(local_b))/2.0;
   for (i = 1; i <= local_n-1; i++) {
     x = local_a + i*h;
     my_result += f(x);
   }
   my_result = my_result*h;

#  pragma omp critical
   *global_result_p += my_result;
}  /* Trap */
```

Scope of Variables

Scope

- In serial programming, the scope of a variable consists of those parts of a program in which the variable can be used.

- In OpenMP, the scope of a variable refers to the set of threads that can access the variable in a parallel block.

Scope in OpenMP

- A variable that can be accessed by all the threads in the team has **shared scope**.

- A variable that can only be accessed by a single thread has **private scope**.

- The default scope for variables declared before a parallel block is shared.

The Reduction Clause

We need this more complex version to add each thread's local calculation to get *global_result*.

```
void Trap(double a, double b, int n, double* global_result_p);
```

Although we'd prefer this.

```
double Trap(double a, double b, int n);
```

```
global_result = Trap(a, b, n);
```

If we use this, there's no critical section!

```
double Local_trap(double a, double b, int n);
```

If we fix it like this…

```
   global_result = 0.0;
#  pragma omp parallel num_threads(thread_count)
   {
#     pragma omp critical
      global_result += Local_trap(double a, double b, int n);
   }
```

… we force the threads to execute **sequentially**.

We can avoid this problem by declaring a private variable inside the parallel block and moving the critical section after the function call.

```
    global_result = 0.0;
#   pragma omp parallel num_threads(thread_count)
    {
        double my_result = 0.0;  /* private */

        my_result += Local_trap(double a, double b, int n);
#       pragma omp critical
        global_result += my_result;
    }
```


I think we can do better.
Neither do I.
I don’t like it.

Reduction operators

- A reduction operator is a binary operation (such as addition or multiplication).
- A reduction is a computation that repeatedly applies the same reduction operator to a sequence of operands in order to get a single result.
- All of the intermediate results of the operation should be stored in the same variable: the reduction variable.

A reduction clause can be added to a parallel directive.

```
reduction(<operator>: <variable list>)
```

+, *, -, &, |, ^, &&, ||

```
   global_result = 0.0;
#  pragma omp parallel num_threads(thread_count) \
      reduction(+: global_result)
   global_result += Local_trap(double a, double b, int n);
```

The “Parallel For” Directive

Parallel for

- Forks a team of threads to execute the following structured block.
- However, the structured block following the parallel for directive must be a for loop.
- Furthermore, with the **parallel for** directive the system parallelizes the **for** loop by dividing the iterations of the loop among the threads.

```
h = (b-a)/n;
approx = (f(a) + f(b))/2.0;
for (i = 1; i <= n-1; i++)
   approx += f(a + i*h);
approx = h*approx;
```

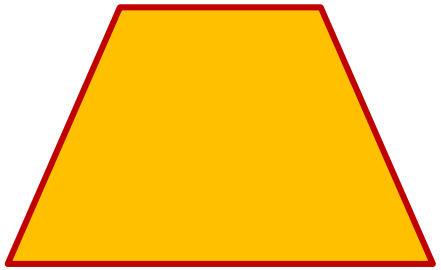

```
   h = (b-a)/n;
   approx = (f(a) + f(b))/2.0;
#  pragma omp parallel for num_threads(thread_count) \
      reduction(+: approx)
   for (i = 1; i <= n-1; i++)
      approx += f(a + i*h);
   approx = h*approx;
```

Legal forms for parallelizable for statements

```
                                        index++
                                        ++index
                     index < end        index--
                     index <= end       --index
for  index = start ; index >= end ;     index += incr
                     index > end        index -= incr
                                        index = index + incr
                                        index = incr + index
                                        index = index - incr
```

Caveats

- The variable index must have integer or pointer type (e.g., it can't be a float).

- The expressions start, end, and incr must have a compatible type. For example, if index is a pointer, then incr must have integer type.

Caveats

- The expressions start, end, and incr must not change during execution of the loop.

- During execution of the loop, the variable index can only be modified by the "increment expression" in the **for** statement.

Data dependencies

```
fibo[ 0 ] = fibo[ 1 ] = 1;
for (i = 2; i < n; i++)
    fibo[ i ] = fibo[ i – 1 ] + fibo[ i – 2 ];
```

note 2 threads

```
fibo[ 0 ] = fibo[ 1 ] = 1;
# pragma omp parallel for num_threads(2)
for (i = 2; i < n; i++)
    fibo[ i ] = fibo[ i – 1 ] + fibo[ i – 2 ];
```

1 1 2 3 5 8 13 21 34 55

this is correct

but sometimes we get this

1 1 2 3 5 8 0 0 0 0

What happened?

- OpenMP compilers don't check for dependences among iterations in a loop that's being parallelized with a parallel for directive.

- A loop in which the results of one or more iterations depend on other iterations cannot be correctly parallelized by OpenMP.

Estimating π

$$\pi = 4\left[1 - \frac{1}{3} + \frac{1}{5} - \frac{1}{7} + \cdots\right] = 4\sum_{k=0}^{\infty}\frac{(-1)^k}{2k+1}$$

```
double factor = 1.0;
double sum = 0.0;
for (k = 0; k < n; k++) {
    sum += factor/(2*k+1);
    factor = -factor;
}
pi_approx = 4.0*sum;
```

OpenMP solution #1

loop dependency

```
        double factor = 1.0;
        double sum = 0.0;
#       pragma omp parallel for num_threads(thread_count) \
           reduction(+:sum)
        for (k = 0; k < n; k++) {
           sum += factor/(2*k+1);
           factor = -factor;
        }
        pi_approx = 4.0*sum;
```

OpenMP solution #2

```
        double sum = 0.0;
#       pragma omp parallel for num_threads(thread_count) \
            reduction(+:sum) private(factor)
        for (k = 0; k < n; k++) {
            if (k % 2 == 0)
                factor = 1.0;
            else
                factor = -1.0;
            sum += factor/(2*k+1);
        }
```

Insures factor has private scope.

Data sharing attributes

- One can selectively change storage attributes

Constructs using the following clauses*

  - SHARED
  - PRIVATE
  - FIRSTPRIVATE
  - THREADPRIVATE

- The value of a private inside a parallel loop can be

transmitted to a global value outside the loop with:

  - LASTPRIVATE

- The default status can be modified with:

  - DEFAULT (PRIVATE | SHARED | NONE)

Private clause

- private (var) creates a local copy of var for each thread
  - The value is uninitialized
  - Private copy is not storage-associated with the original
  - The original is undefined at the end
- Each thread gets its own var which are however not initialized
- Regardless of initialization, var is undefined at the end of the parallel region

```
int var = 13;
#pragma omp parallel for private (var)
for ( j=0; j<1000; j++ ) {
    var = var + j;
}
printf ("%d\n", var );
```

Firstprivate clause

Firstprivate is a special case of private.

– Initializes each private copy with the corresponding value from the master thread.

- Each thread gets its own var with an initial value of 13
- Regardless of initialization, var is undefined at the end of the parallel region

```
int var = 13;
#pragma omp parallel for firstprivate (var)
for ( j=0; j<1000; j++ ) {
 var = var + j;
}
printf (“%d\n”, var );
```

Note： In C/C++: a variable with the same name in an inner scope will prevent a variable with that name in an outer scope to be accessed - this is called: shadowing

Lastprivate clause

- Lastprivate passes the value of a private from the last iteration to a global variable
- Each thread gets its own var with an initial value of 13
- var is defined as its value at the “last sequential” iteration (i.e. for j=999)

```
int var = 13;
#pragma omp parallel for firstprivate (var) lastprivate (var)
for ( j=0; j<1000; j++ ) {
 var = var + j;
}
printf (“%d\n”, var );
```

Default clause

- Lets the programmer specify the scope of each variable in a block.

- With this clause the compiler will require that we specify the scope of each variable we use in the block and that has been declared outside the block.

Default clause

```
    double sum = 0.0;
#   pragma omp parallel for num_threads(thread_count) \
        default(none) reduction(+:sum) private(k, factor) \
        shared(n)
    for (k = 0; k < n; k++) {
        if (k % 2 == 0)
            factor = 1.0;
        else
            factor = -1.0;
        sum += factor/(2*k+1);
    }
```

More About Loops in OpenMP: Sorting

Bubble Sort

```
for (list_length = n; list_length >= 2; list_length--)
    for (i = 0; i < list_length-1; i++)
        if (a[i] > a[i+1]) {
            tmp = a[i];
            a[i] = a[i+1];
            a[i+1] = tmp;
        }
```

Serial Odd-Even Transposition Sort

```
for (phase = 0; phase < n; phase++)
   if (phase % 2 == 0)
      for (i = 1; i < n; i += 2)
         if (a[i-1] > a[i]) Swap(&a[i-1],&a[i]);
   else
      for (i = 1; i < n-1; i += 2)
         if (a[i] > a[i+1]) Swap(&a[i], &a[i+1]);
```

Serial Odd-Even Transposition Sort

Phase	Subscript in Array 0		1		2		3
0	9	$\leftrightarrow$	7		8	$\leftrightarrow$	6
	7		9		6		8
1	7		9	$\leftrightarrow$	6		8
	7		6		9		8
2	7	$\leftrightarrow$	6		9	$\leftrightarrow$	8
	6		7		8		9
3	6		7	$\leftrightarrow$	8		9
	6		7		8		9

First OpenMP Odd-Even Sort

```
for (phase = 0; phase < n; phase++) {
    if (phase % 2 == 0)
#       pragma omp parallel for num_threads(thread_count) \
            default(none) shared(a, n) private(i, tmp)
        for (i = 1; i < n; i += 2) {
            if (a[i-1] > a[i]) {
                tmp = a[i-1];
                a[i-1] = a[i];
                a[i] = tmp;
            }
        }
    else
#       pragma omp parallel for num_threads(thread_count) \
            default(none) shared(a, n) private(i, tmp)
        for (i = 1; i < n-1; i += 2) {
            if (a[i] > a[i+1]) {
                tmp = a[i+1];
                a[i+1] = a[i];
                a[i] = tmp;
            }
        }
}
```

Second OpenMP Odd-Even Sort

```
#  pragma omp parallel num_threads(thread_count) \
      default(none) shared(a, n) private(i, tmp, phase)
   for (phase = 0; phase < n; phase++) {
      if (phase % 2 == 0)
#        pragma omp for
         for (i = 1; i < n; i += 2) {
            if (a[i-1] > a[i]) {
               tmp = a[i-1];
               a[i-1] = a[i];
               a[i] = tmp;
            }
         }
      else
#        pragma omp for
         for (i = 1; i < n-1; i += 2) {
            if (a[i] > a[i+1]) {
               tmp = a[i+1];
               a[i+1] = a[i];
               a[i] = tmp;
            }
         }
   }
```

Tells OpenMP to parallelize the for loop with existing team of threads

Odd-even sort with two **parallel for** directives and two **for** directives.

(Times are in seconds.)

thread_count	1	2	3	4
Two parallel **for** directives	0.770	0.453	0.358	0.305
Two **for** directives	0.732	0.376	0.294	0.239

Scheduling Loops

Our definition of function *f*.

```
double f(int i) {
    int j, start = i*(i+1)/2, finish = start + i;
    double return_val = 0.0;

    for (j = start; j <= finish; j++) {
        return_val += sin(j);
    }
    return return_val;
}  /* f */
```

The time required by the call to f is proportional to the size of i

We want to parallelize this loop.

```
sum = 0.0;
for (i = 0; i <= n; i++)
    sum += f(i);
```

Thread	Iterations
0	$0,\ n/t,\ 2n/t,\ \ldots$
1	$1,\ n/t+1,\ 2n/t+1,\ \ldots$
$\vdots$	$\vdots$
$t-1$	$t-1,\ n/t+t-1,\ 2n/t+t-1,\ \ldots$

Assignment of work using cyclic partitioning.

Results

- ***f(i)*** calls the sin function i times.
- Assume the time to execute *f(2i)* requires approximately twice as much time as the time to execute *f(i).*

- n = 10,000
  - one thread
  - run-time = 3.67 seconds.

Results

- n = 10,000
  - two threads
  - default assignment
  - run-time = 2.76 seconds
  - speedup = **1.33**

- n = 10,000
  - two threads
  - cyclic assignment
  - run-time = 1.84 seconds
  - speedup = **1.99**

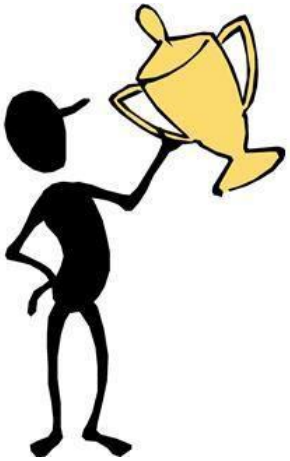

Impact of Scheduling Decision

Load balance

- Same work in each iteration?
- Processors working at same speed?

Scheduling overhead

- Static decisions are cheap because they require no run-time coordination
- Dynamic decisions have overhead that is impacted by complexity and frequency of decisions

Data locality

- Particularly within cache lines for small chunk sizes
- Also impacts data reuse on same processor
- Data layout at NUMA and multi-core CPU

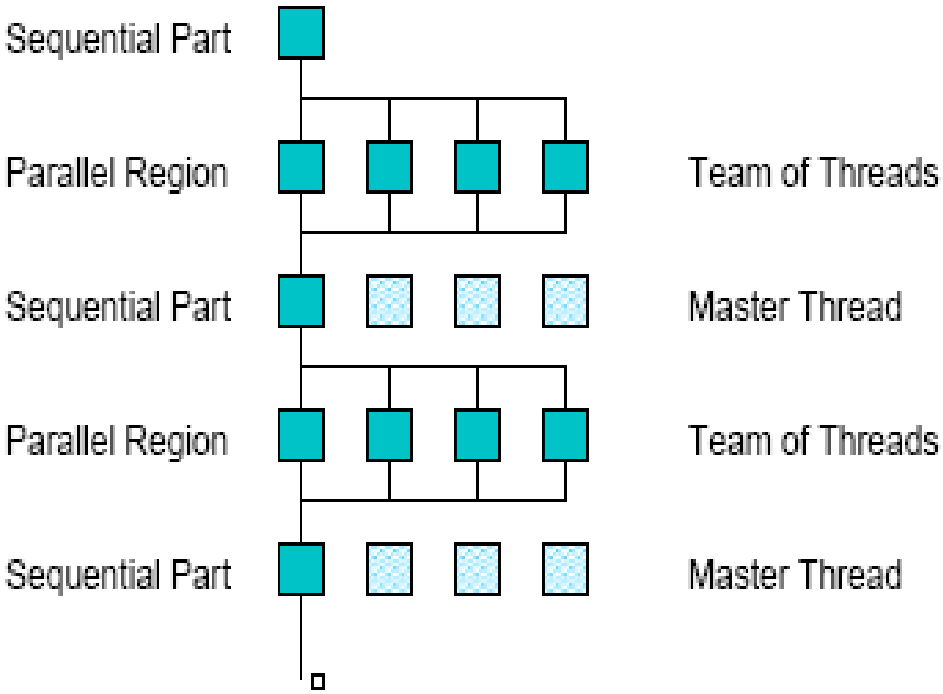

The Schedule Clause

```
        sum = 0.0;
#       pragma omp parallel for num_threads(thread_count) \
           reduction(+:sum)
        for (i = 0; i <= n; i++)
           sum += f(i);
```

- Cyclic schedule:

```
        sum = 0.0;
#       pragma omp parallel for num_threads(thread_count) \
           reduction(+:sum) schedule(static ,1)
        for (i = 0; i <= n; i++)
           sum += f(i);
```

schedule (type , chunksize)

Type can be:

- **static**: the iterations can be assigned to the threads before the loop is executed.
- **dynamic or guided**: the iterations are assigned to the threads while the loop is executing.
- **auto**: the compiler and/or the run-time system determine the schedule.
- **runtime**: the schedule is determined at run-time.

The Static Schedule Type

twelve iterations, 0, 1, . . . , 11, and three threads

```
schedule(static,1)
```

$$\text{Thread } 0: \quad \boxed{0}, 3, 6, 9$$
$$\text{Thread } 1: \quad \boxed{1}, 4, 7, 10$$
$$\text{Thread } 2: \quad \boxed{2}, 5, 8, 11$$

The Static Schedule Type

twelve iterations, 0, 1, . . . , 11, and three threads

```
schedule(static,2)
```

$$\begin{aligned} \text{Thread } 0: &\quad \boxed{0,1},\ 6,7 \\ \text{Thread } 1: &\quad \boxed{2,3},\ 8,9 \\ \text{Thread } 2: &\quad \boxed{4,5},\ 10,11 \end{aligned}$$

The Static Schedule Type

twelve iterations, 0, 1, . . . , 11, and three threads

```
schedule(static,4)
```

Thread 0 : 0, 1, 2, 3

Thread 1 : 4, 5, 6, 7

Thread 2 : 8, 9, 10, 11

The Dynamic Schedule Type

- The iterations are also broken up into chunks of chunksize consecutive iterations.
- Each thread executes a chunk, and when a thread finishes a chunk, it requests another one from the run-time system.
- This continues until all the iterations are completed.

The Guided Schedule Type

- Each thread also executes a chunk, and when a thread finishes a chunk, it requests another one.

- However, in a guided schedule, as chunks are completed, the size of the new chunks decreases.

Thread	Chunk	Size of Chunk	Remaining Iterations
0	1 – 5000	5000	4999
1	5001 – 7500	2500	2499
1	7501 – 8750	1250	1249
1	8751 – 9375	625	624
0	9376 – 9687	312	312
1	9688 – 9843	156	156
0	9844 – 9921	78	78
1	9922 – 9960	39	39
1	9961 – 9980	20	19
1	9981 – 9990	10	9
1	9991 – 9995	5	4
0	9996 – 9997	2	2
1	9998 – 9998	1	1
0	9999 – 9999	1	0

Assignment of trapezoidal rule iterations 1–9999 using a guided schedule with two threads.

The Runtime Schedule Type

- The system uses the environment variable OMP_SCHEDULE to determine at run-time how to schedule the loop.

- The OMP_SCHEDULE environment variable can take on any of the values that can be used for a static, dynamic, or guided schedule.

OpenMP environment variables

OMP_NUM_THREADS

- sets the number of threads to use during execution
- when dynamic adjustment of the number of threads is enabled, the value of this environment variable is the maximum number of threads to use
- For example,

  setenv OMP_NUM_THREADS 16 **[csh, tcsh]**

  export OMP_NUM_THREADS=16 **[sh, ksh, bash]**

OMP_SCHEDULE

- applies only to do/for and parallel do/for directives that have the schedule type RUNTIME
- sets schedule type and chunk size for all such loops
- For example,

  setenv OMP_SCHEDULE GUIDED,4 **[csh, tcsh]**

  export OMP_SCHEDULE= GUIDED,4 **[sh, ksh, bash]**

Producers and Consumers

Queues

- Can be viewed as an abstraction of a line of customers waiting to pay for their groceries in a supermarket.
- A natural data structure to use in many multithreaded applications.
- For example, suppose we have several "producer" threads and several "consumer" threads.
  - Producer threads might "produce" requests for data.
  - Consumer threads might "consume" the request by finding or generating the requested data.

Message-Passing

- Each thread could have a **shared** message queue
- When one thread wants to "send a message" to another thread, it could **enqueue** the message in the destination thread's queue.
- A thread could receive a message by dequeuing the message at the head of its message queue.

Message-Passing

```
for (sent_msgs = 0; sent_msgs < send_max; sent_msgs++) {
    Send_msg();
    Try_receive();
}

while (!Done())
    Try_receive();
```

Sending Messages

```
    mesg = random();
    dest = random() % thread_count;
#   pragma omp critical
    Enqueue(queue, dest, my_rank, mesg);
```

Receiving Messages

```
    if (queue_size == 0) return;
    else if (queue_size == 1)
#       pragma omp critical
        Dequeue(queue, &src, &mesg);
    else
        Dequeue(queue, &src, &mesg);
    Print_message(src, mesg);
```

Termination Detection

```
queue_size = enqueued - dequeued;
if (queue_size == 0 && done_sending == thread_count)
   return TRUE;
else
   return FALSE;
```

each thread increments this after completing its for loop

Startup (1)

- When the program begins execution, a single thread, the master thread, will get command line arguments and allocate an array of message queues: one for each thread.

- This array needs to be shared among the threads, since any thread can send to any other thread, and hence any thread can enqueue a message in any of the queues.

Startup (2)

- One or more threads may finish allocating their queues before some other threads.
- We need an explicit barrier so that when a thread encounters the barrier, it blocks until all the threads in the team have reached the barrier.
- After all the threads have reached the barrier, all the threads in the team can proceed.

```
# pragma omp barrier
```

The Atomic Directive (1)

- Unlike the critical directive, it can only protect critical sections that consist of a single C assignment statement.

- Further, the statement must have one of the following forms:

```
x <op>= <expression>;
x++;
++x;
x--;
--x;
```

The Atomic Directive (2)

- Here <op> can be one of the binary operators

  `+, *, -, /, &, ^, |, <<, or >>`

- Many processors provide a special load-modify-store instruction.

- A critical section that only does a load-modify-store can be protected much more efficiently by using this special instruction.

Critical Sections

- OpenMP provides the option of adding a name to a critical directive:

- When we do this, two blocks protected with critical directives with different names can be executed simultaneously.
- However, the names are set during compilation, and we want a different critical section for each thread's queue.

Locks

- A **lock** consists of a data structure and functions that allow the programmer to explicitly enforce mutual exclusion in a critical section.

Locks

```
/* Executed by one thread */
Initialize the lock data structure;
. . .
/* Executed by multiple threads */
Attempt to lock or set the lock data structure;
Critical section;
Unlock or unset the lock data structure;
. . .
/* Executed by one thread */
Destroy the lock data structure;
```

Using Locks in the Message-Passing Program

```
# pragma omp critical
/* q_p = msg_queues[dest] */
Enqueue(q_p, my_rank, mesg);
```

```
/* q_p = msg_queues[dest] */
omp_set_lock(&q_p->lock);
Enqueue(q_p, my_rank, mesg);
omp_unset_lock(&q_p->lock);
```

Using Locks in the Message-Passing Program

```
#  pragma omp critical
   /* q_p = msg_queues[my_rank] */
   Dequeue(q_p, &src, &mesg);
```

```
/* q_p = msg_queues[my_rank] */
omp_set_lock(&q_p->lock);
Dequeue(q_p, &src, &mesg);
omp_unset_lock(&q_p->lock);
```

Some Caveats

- You shouldn't mix the different types of mutual exclusion for a single critical section.
  - E.g., *critical* may not exclude *atomic*.
- There is no guarantee of fairness in mutual exclusion constructs.
  - E.g., it is possible that a thread can be blocked forever
- It can be dangerous to "nest" mutual exclusion constructs.

```
if (…)
# pragma omp atomic
  x +=f(y);
else
# pragma omp critical
x = g(x);
```

```
While(1){
# pragma omp critical
   x = g(my_rank);
}
```

```
#pragma omp critical
 y = f(x)
 …
Double f (double x){
# pragma omp critical
 z = g(x); // z is shared
}
```

```
#pragma omp critical (one)
 y = f(x)
 …
Double f (double x){
# pragma omp critical (two)
 z = g(x); // z is shared
}
```

Matrix-vector multiplication

$$y_i = a_{i0}x_0 + a_{i1}x_1 + \cdots + a_{i,n-1}x_{n-1}$$

a_{00}	a_{01}	$\cdots$	$a_{0,n-1}$
a_{10}	a_{11}	$\cdots$	$a_{1,n-1}$
$\vdots$	$\vdots$		$\vdots$
a_{i0}	a_{i1}	$\cdots$	$a_{i,n-1}$
$\vdots$	$\vdots$		$\vdots$
$a_{m-1,0}$	$a_{m-1,1}$	$\cdots$	$a_{m-1,n-1}$

x_0
x_1
$\vdots$
x_{n-1}

$=$

y_0
y_1
$\vdots$
$y_i = a_{i0}x_0 + a_{i1}x_1 + \cdots a_{i,n-1}x_{n-1}$
$\vdots$
y_{m-1}

```
for (i = 0; i < m; i++) {
    y[i] = 0.0;
    for (j = 0; j < n; j++)
        y[i] += A[i][j]*x[j];
}
```

Matrix-vector multiplication

```
#  pragma omp parallel for num_threads(thread_count)  \
      default(none) private(i, j) shared(A, x, y, m, n)
   for (i = 0; i < m; i++) {
      y[i] = 0.0;
      for (j = 0; j < n; j++)
         y[i] += A[i][j]*x[j];
   }
```

Valgrind is an instrumentation framework for building dynamic analysis tools, that can automatically detect many memory management and threading bugs.

Run-times and efficiencies

Threads	Matrix Dimension					
	$8,000,000 \times 8$		8000×8000		$8 \times 8,000,000$	
	Time	Eff.	Time	Eff.	Time	Eff.
1	0.322	1.000	0.264	1.000	0.333	1.000
2	0.219	0.735	0.189	0.698	0.300	0.555
4	0.141	0.571	0.119	0.555	0.303	0.275

Thread-Safety

```
void Tokenize(
      char*  lines[]        /* in/out */,
      int    line_count     /* in     */,
      int    thread_count   /* in     */) {
   int my_rank, i, j;
   char *my_token;

#  pragma omp parallel num_threads(thread_count) \
      default(none) private(my_rank, i, j, my_token) \
      shared(lines, line_count)
   {
      my_rank = omp_get_thread_num();
#     pragma omp for schedule(static, 1)
      for (i = 0; i < line_count; i++) {
         printf("Thread %d > line %d = %s", my_rank, i, lines[i]);
         j = 0;
         my_token = strtok(lines[i], " \t\n");
         while ( my_token != NULL ) {
            printf("Thread %d > token %d = %s\n", my_rank, j, my_token);
            my_token = strtok(NULL, " \t\n");
            j++;
         }
      } /* for i */
   } /* omp parallel */

} /* Tokenize */
```

OpenMP Execution Model

- **Fork and Join Model**
  - Master thread forks new threads at the beginning of parallel regions.
  - Multiple threads share work in parallel.
  - Threads join at the end of the parallel regions.

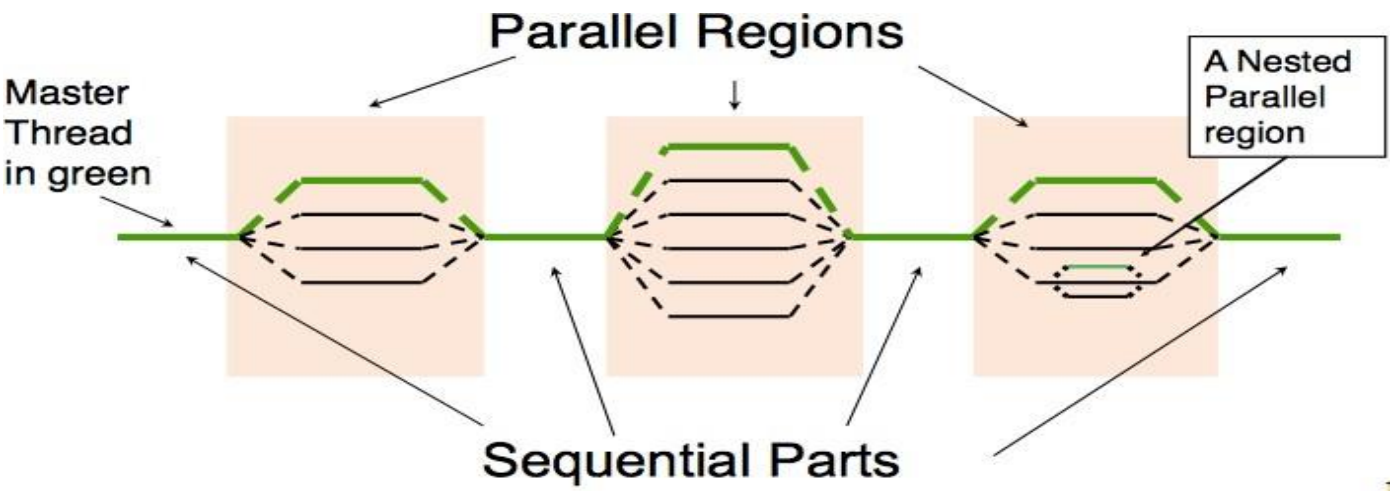

Hopper/Edison Compute Nodes

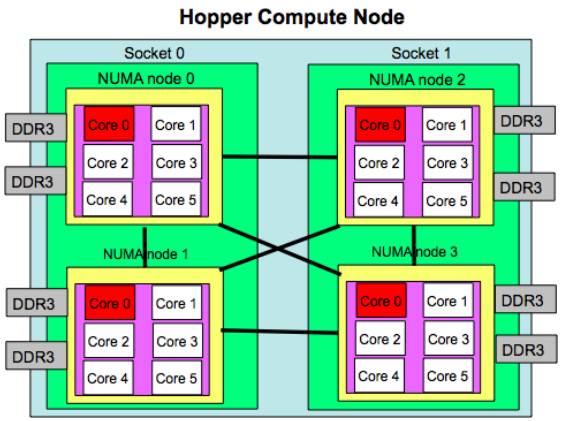

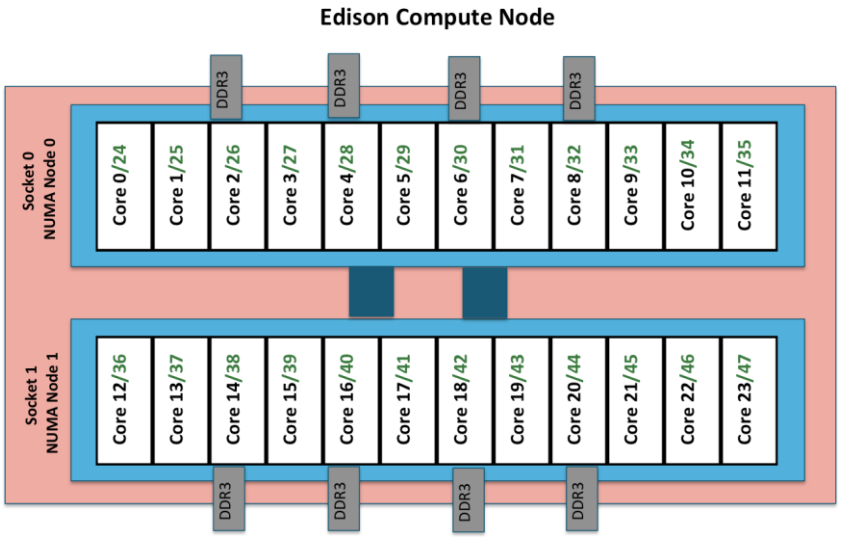

- **Hopper: NERSC Cray XE6, 6,384 nodes, 153,126 cores.**
  - **4 NUMA domains per node, 6 cores per NUMA domain.**
- **Edison: NERSC Cray XC30, 5,576 nodes, 133,824 cores.**
  - **2 NUMA domains per node, 12 cores per NUMA domain.**
    2 hardware threads per core.
- **Memory bandwidth is non-homogeneous among NUMA domains.**

Thread Affinity Control in OpenMP 4.0

- **OMP_PLACES: a list of places that threads can be pinned on**
  - threads: Each place corresponds to a single hardware thread on the target machine.
  - cores: Each place corresponds to a single core (having one or more hardware threads) on the target machine.
  - sockets: Each place corresponds to a single socket (consisting of one or more cores) on the target machine.
  - A list with explicit place values: such as:
    - "{0,1,2,3},{4,5,6,7},{8,9,10,11},{12,13,14,15}"
    - "{0:4},{4:4},{8:4},{12:4}"
- **OMP_PROC_BIND**
  - spread: Bind threads as evenly distributed (spread) as possible
  - close: Bind threads close to the master thread while still distributing threads for load balancing, wrap around once each place receives one thread
  - master: Bind threads the same place as the master thread

Nested OpenMP Thread Affinity Illustration

```
setenv OMP_PLACES threads
setenv OMP_NUM_THREADS 4,4
setenv OMP_PROC_BIND spread,close
```

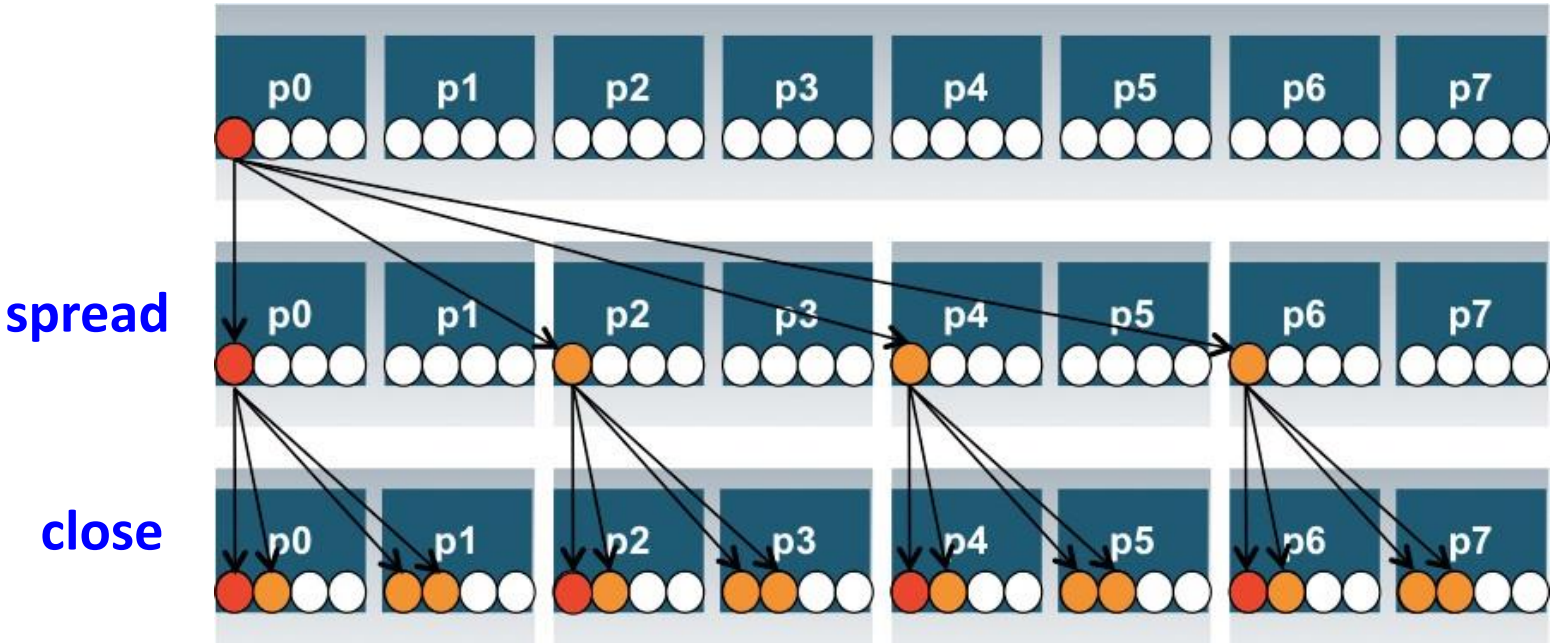

Sample Nested OpenMP Code

```
#include <omp.h>
#include <stdio.h>
void report_num_threads(int level)
{
   #pragma omp single {
       prinl("Level %d: number of threads in the
team: %d\n", level, omp_get_num_threads());
      }
}
int main()
{
   omp_set_dynamic(0);
   #pragma omp parallel num_threads(2) {
      report_num_threads(1);
      #pragma omp parallel num_threads(2) {
         report_num_threads(2);
         #pragma omp parallel num_threads(2) {
            report_num_threads(3);
         }
      }
   }
   return(0);
}
```

```
% a.out
Level 1: number of threads in the team: 2
Level 2: number of threads in the team: 1
Level 3: number of threads in the team: 1
Level 2: number of threads in the team: 1
Level 3: number of threads in the team: 1
```

```
% setenv OMP_NESTED TRUE
% a.out
Level 1: number of threads in the team: 2
Level 2: number of threads in the team: 2
Level 2: number of threads in the team: 2
Level 3: number of threads in the team: 2
Level 3: number of threads in the team: 2
Level 3: number of threads in the team: 2
Level 3: number of threads in the team: 2
```

Level 0: P0
Level 1: P0 P1
Level 2: P0 P2; P1 P3
Level 3: P0 P4; P2 P5; P1 P6; P3 P7

Concluding Remarks (1)

- OpenMP is a standard for programming shared-memory systems.
- OpenMP uses both special functions and preprocessor directives called **pragmas**.
- OpenMP programs start multiple threads rather than multiple processes.
- Many OpenMP directives can be modified by clauses.

Concluding Remarks (2)

- A major problem in the development of shared memory programs is the possibility of race conditions.

- OpenMP provides several mechanisms for insuring mutual exclusion in critical sections.
  - Critical directives
  - Named critical directives
  - Atomic directives
  - Simple locks

Concluding Remarks (3)

- By default most systems use a block-partitioning of the iterations in a parallelized for loop.
- OpenMP offers a variety of scheduling options.
- In OpenMP the scope of a variable is the collection of threads to which the variable is accessible.

Concluding Remarks (4)

- A reduction is a computation that repeatedly applies the same reduction operator to a sequence of operands in order to get a single result.