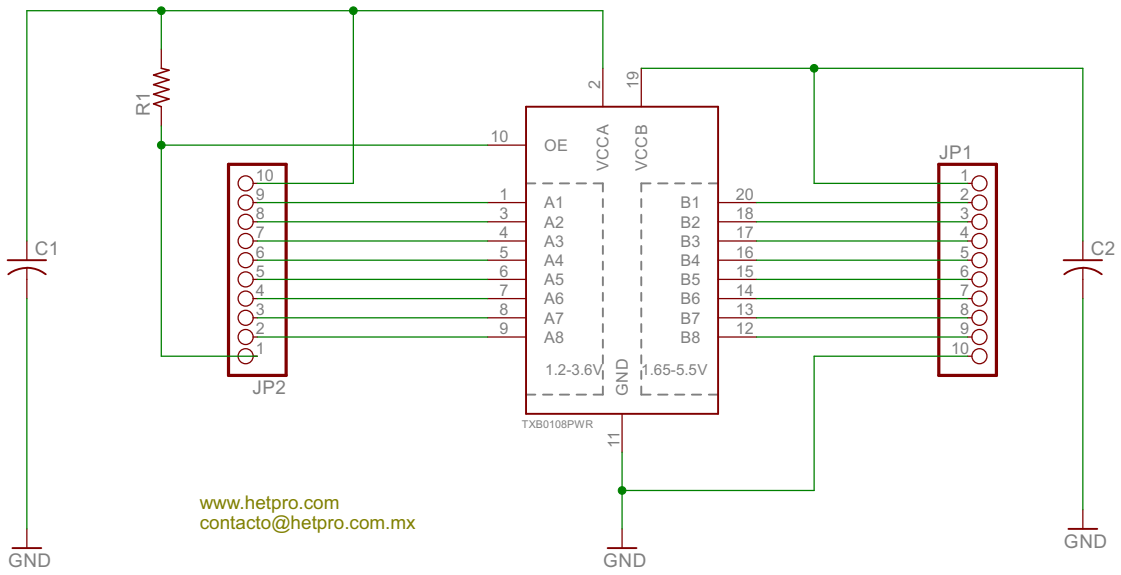
R1
C1
C2
JP2
JP1
OE
VCCA
VCCB
A1
A2
A3
A4
A5
A6
A7
A8
B1
B2
B3
B4
B5
B6
B7
B8
1.2-3.6V
1.65-5.5V
GND
TXB0108PWR
www.hetpro.com
contacto@hetpro.com.mx
GND
GND
GND