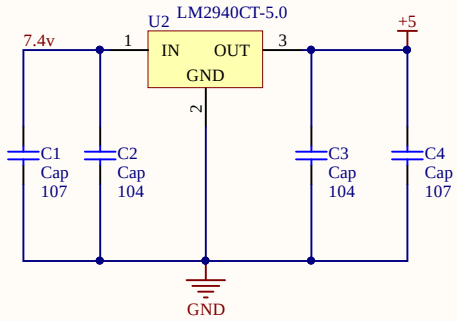
U2
LM2940CT-5.0
7.4v
IN
OUT
GND
+5
C1
Cap
107
C2
Cap
104
C3
Cap
104
C4
Cap
107
GND

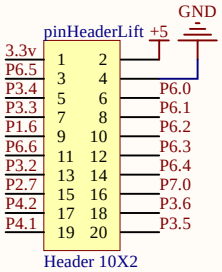
pinHeaderLift
GND
+5
3.3v
P6.5
P3.4
P3.3
P1.6
P6.6
P3.2
P2.7
P4.2
P4.1
P6.0
P6.1
P6.2
P6.3
P6.4
P7.0
P3.6
P3.5
Header 10X2

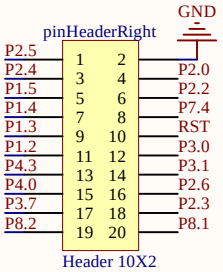
pinHeaderRight
GND
P2.5
P2.4
P1.5
P1.4
P1.3
P1.2
P4.3
P4.0
P3.7
P8.2
P2.0
P2.2
P7.4
RST
P3.0
P3.1
P2.6
P2.3
P8.1
Header 10X2

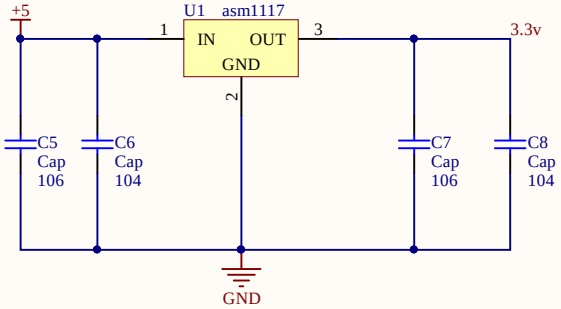
+5
U1
asm1117
IN
OUT
GND
3.3v
C5
Cap
106
C6
Cap
104
C7
Cap
106
C8
Cap
104
GND

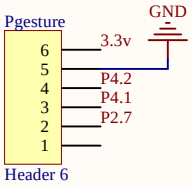
Pgesture
GND
3.3v
P4.2
P4.1
P2.7
Header 6

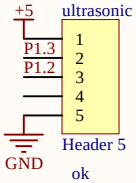
+5
ultrasonic
P1.3
P1.2
GND
Header 5
ok

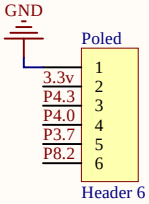
GND
Poled
3.3v
P4.3
P4.0
P3.7
P8.2
Header 6

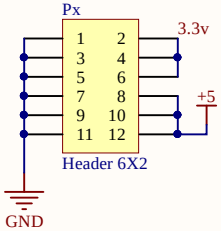
Px
3.3v
+5
GND
Header 6X2

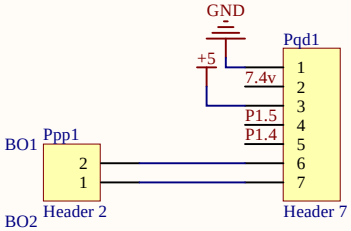
GND
+5
7.4v
P1.5
P1.4
Pqd1
BO1
Ppp1
BO2
Header 2
Header 7

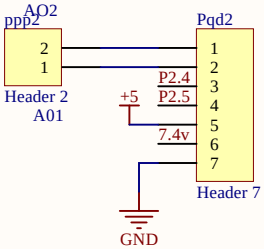
AO2
ppp2
Header 2
A01
Pqd2
P2.4
P2.5
+5
7.4v
GND
Header 7

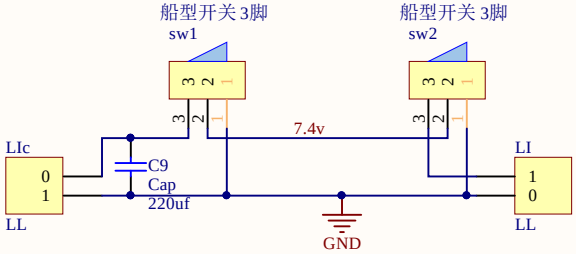
船型开关 3脚
sw1
船型开关 3脚
sw2
7.4v
LIc
LL
C9
Cap
220uf
LI
LL
GND

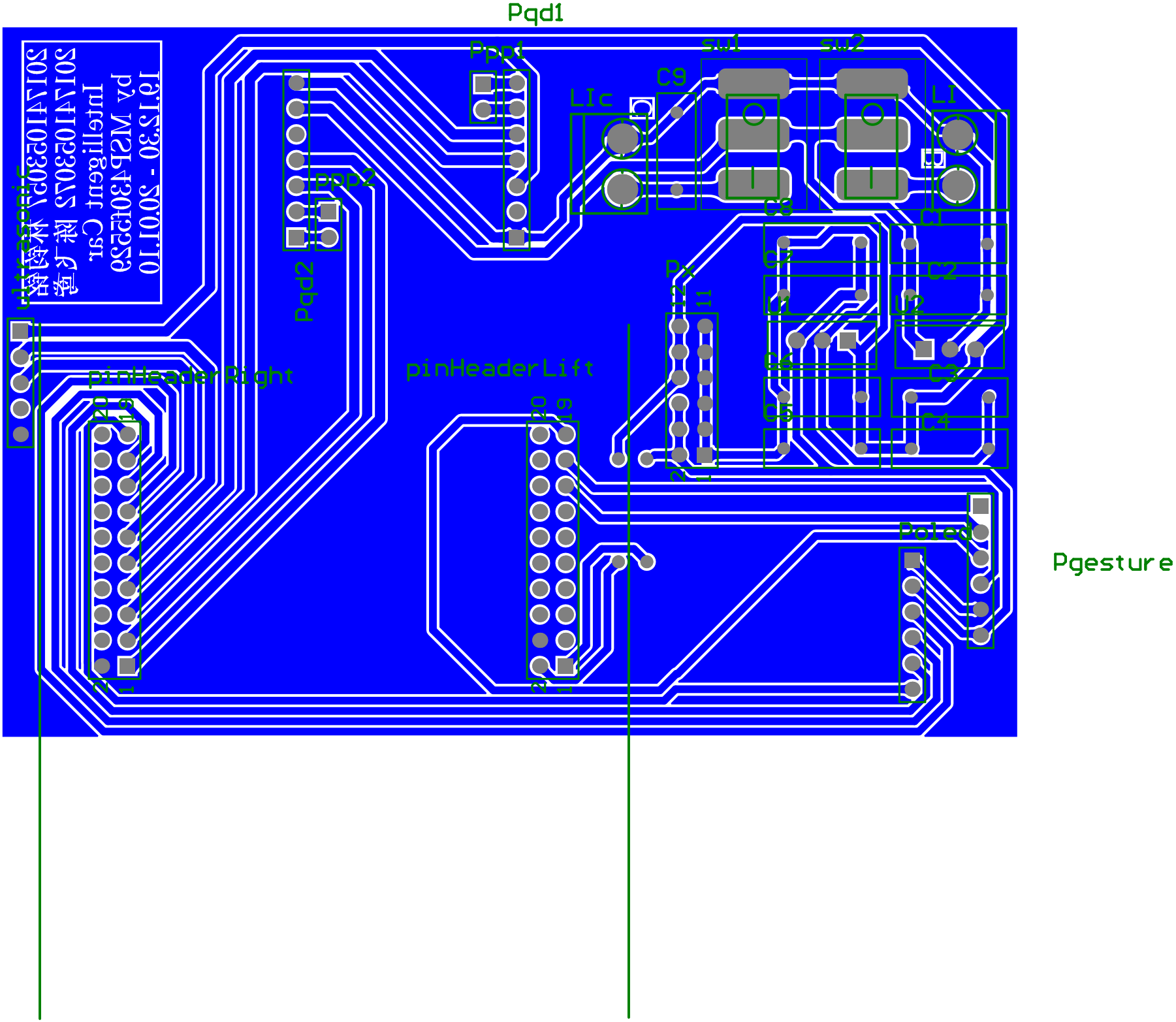
Pqd1
Ppp1
sw1
sw2
C9
LIc
LI
C8
C1
C7
C2
Px
U2
C6
C3
C5
C4
Pqd2
Ppp2
pinHeaderRight
pinHeaderLift
Poled
Pgesture

# Board Stack Report