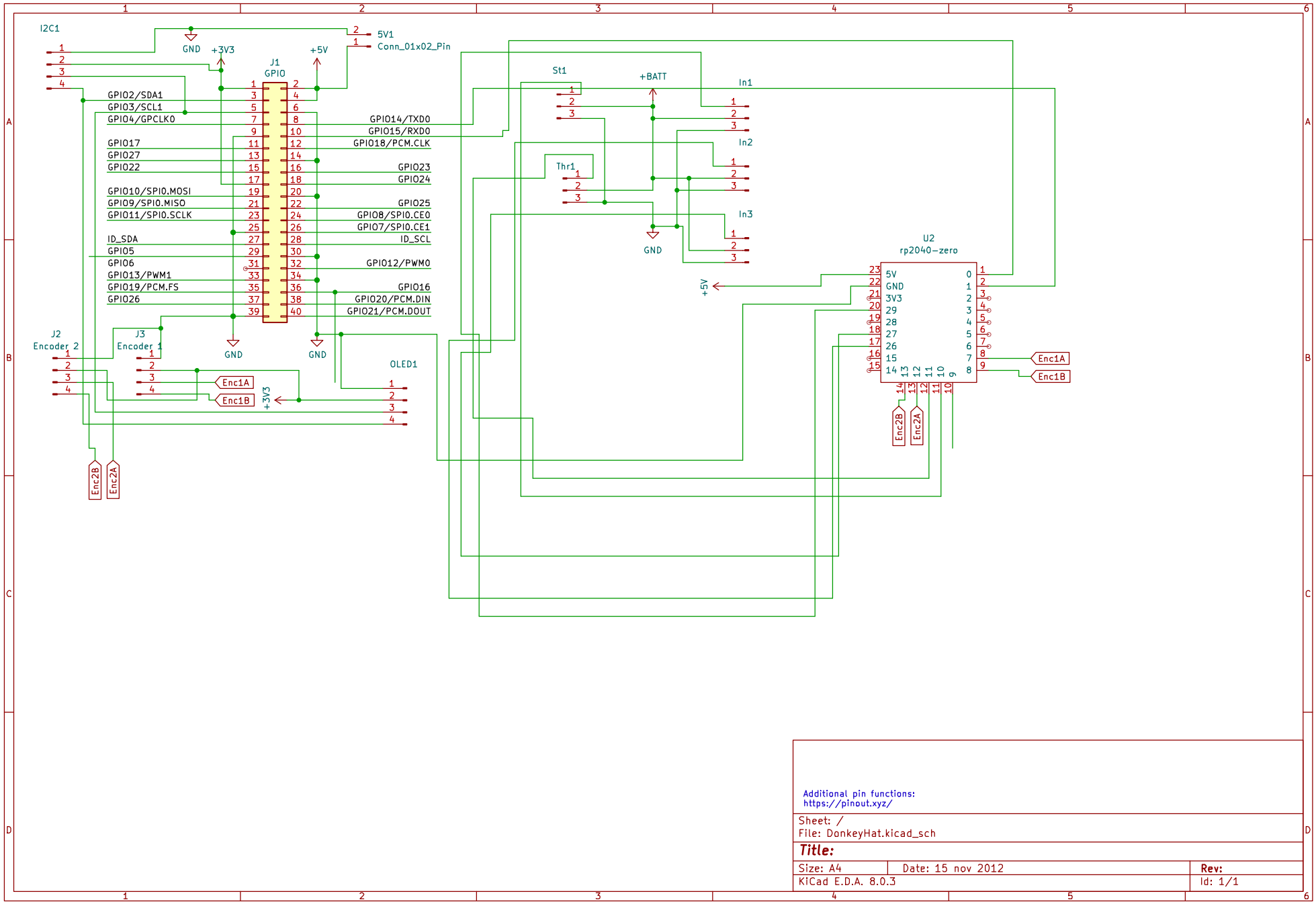
I2C1
GND
+3V3
+5V
5V1
Conn_01x02_Pin
J1
GPIO
GPIO2/SDA1
GPIO3/SCL1
GPIO4/GPCLK0
GPIO17
GPIO27
GPIO22
GPIO10/SPI0.MOSI
GPIO9/SPI0.MISO
GPIO11/SPI0.SCLK
ID_SDA
GPIO5
GPIO6
GPIO13/PWM1
GPIO19/PCM.FS
GPIO26
GPIO14/TXD0
GPIO15/RXD0
GPIO18/PCM.CLK
GPIO23
GPIO24
GPIO25
GPIO8/SPI0.CE0
GPIO7/SPI0.CE1
ID_SCL
GPIO12/PWM0
GPIO16
GPIO20/PCM.DIN
GPIO21/PCM.DOUT
J2
Encoder 2
J3
Encoder 1
Enc1A
Enc1B
Enc2B
Enc2A
OLED1
St1
Thr1
+BATT
In1
In2
In3
U2
rp2040-zero
5V
GND
3V3
29
28
27
26
15
14
0
1
2
3
4
5
6
7
8
9
Additional pin functions:
https://pinout.xyz/
Sheet: /
File: DonkeyHat.kicad_sch
Title:
Size: A4
Date: 15 nov 2012
Rev:
KiCad E.D.A. 8.0.3
Id: 1/1