HEBI ROBOTICS

Florence

Assembly Instructions

General Warnings and Cautions

Danger (May cause serious injury or death)

- Keep water, flammables, solvents and other liquids clear from actuator.
- Never place fingers, arms, toes and other body parts near actuator during operation.
- Cut power if actuator emits strange odors or smoke.
- Keep actuator out of reach of children.

Warning (May cause injury or damage to actuator)

- Before operating, read all applicable instructions and notices found here:
  http://docs.hebi.us/#quickstart-guide-x-series-actuator
- Comply with the operating temperature (-10℃ to 50℃)
- Turn off power source before connecting or disconnecting actuator power.
- Do not expose the actuator to permanent and strong magnetic fields.
- The actuator must not be exposed to dusty or wet environments.
- If actuator is under load, abruptly removing the power connection can cause permanent damage.
- Do not force screws into the bottom of the actuator.
  - **X5:** 5mm tap depth
  - **X8:** 7mm tap depth
- Use provided hardware with accessories and hand tighten as needed.
- Do not attempt to disassemble actuator, this will void the warranty and can cause permanent damage.

For more information please visit: ***docs.hebi.us***

Bill of Materials - Mechanical*

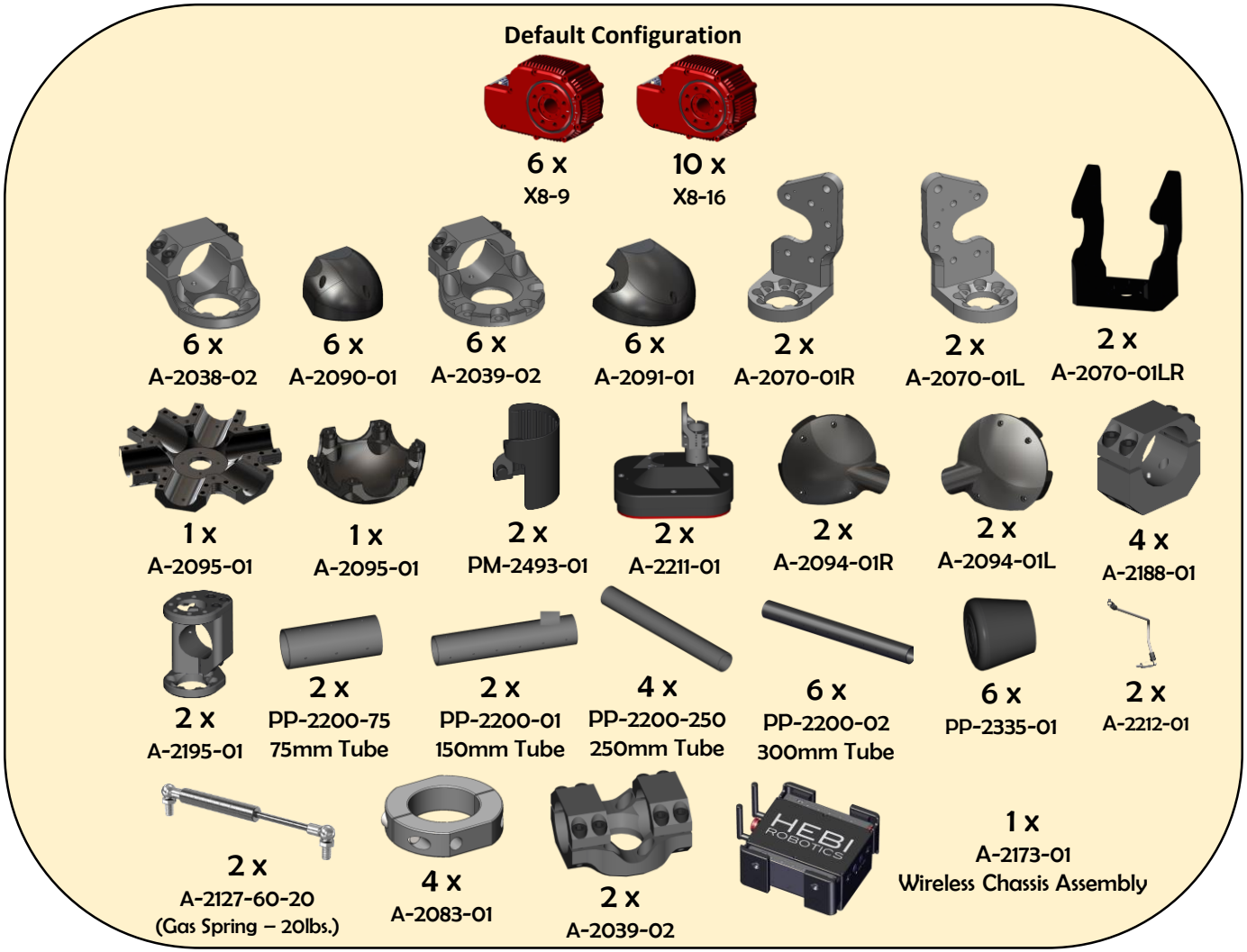

fasteners included, not shown

Bill of Materials - Electrical

8 x
A-2128-01
Power Distribution Board

2 x
PP-2058-01
Ethernet Coupler

2 x
A-2048-02
Inline Power Coupler

4 x
A-2046-06
Power Cable, 6" Length

18 x
A-2046-12
Power Cable, 12" Length

4 x
A-2046-18
Power Cable, 18" Length

8 x
PP-2059-01
Ethernet Cable, 1' Length

8 x
PP-2060-01
Ethernet Cable, 2' Length

2 x
PP-2042-01
Power Capacitor

Table of Contents

Assembly	**Image**	**Pages**
Chassis		[6-13]
Left Leg		[14-29]
Right Leg		[30-45]
Final (includes wiring)		[46-52]

Chassis

2 x

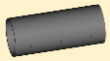

1 x
PP-2200-075
75mm Tube

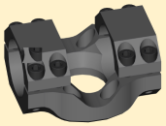

1 x
A-2039-02

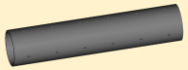

1 x
PP-2200-1
150mm Tube

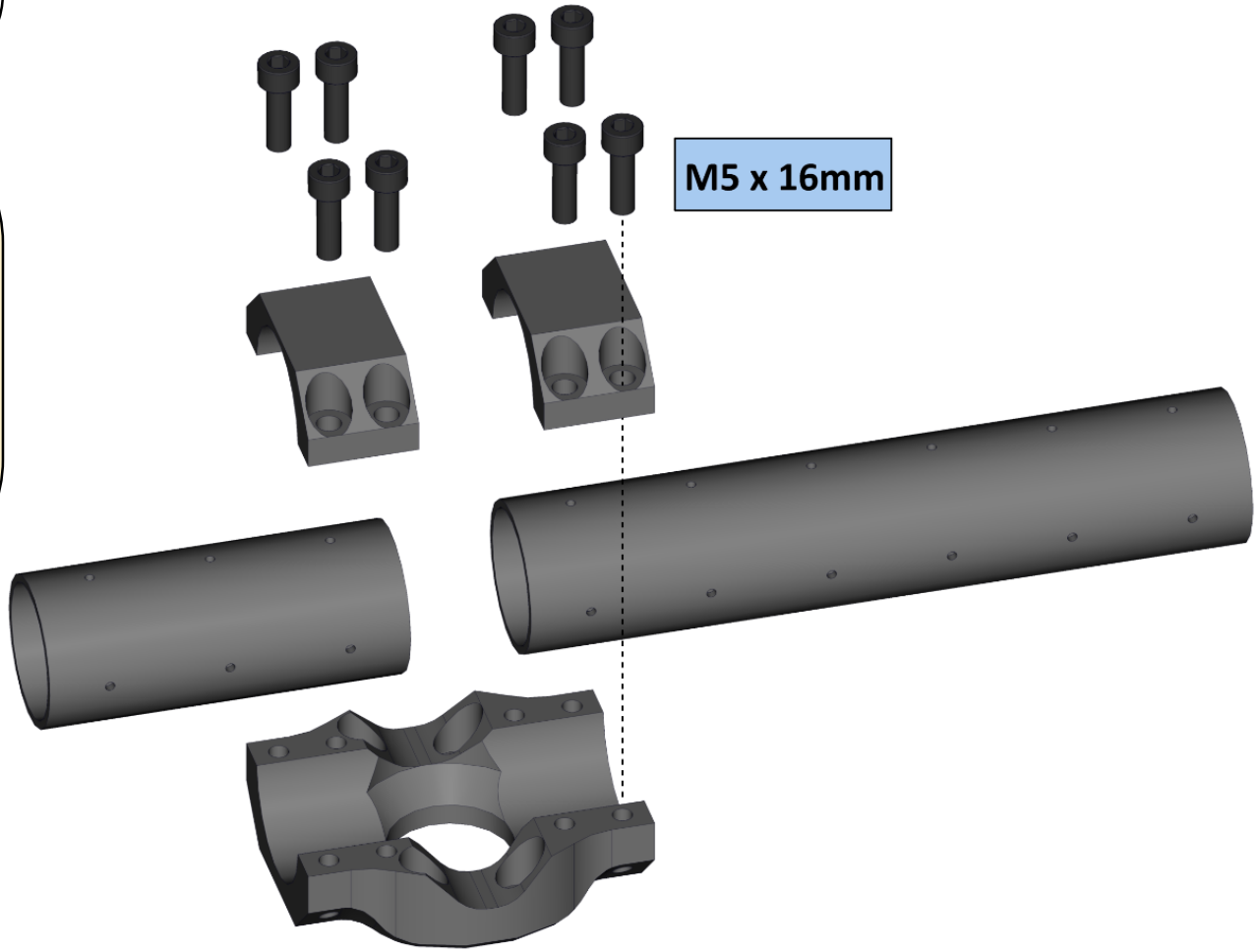

2 x

1 x

PP-2335-01
Rubber Cap

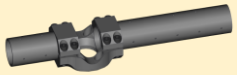

1 x

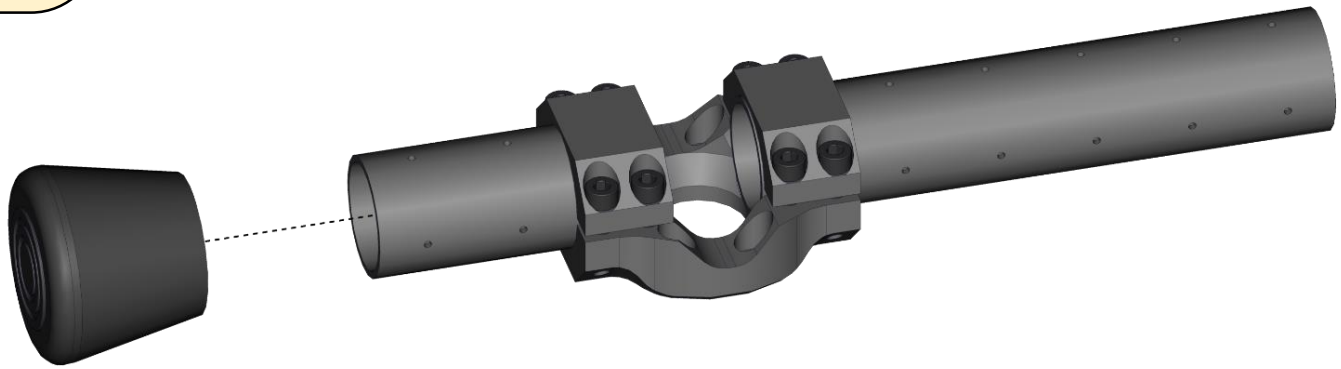

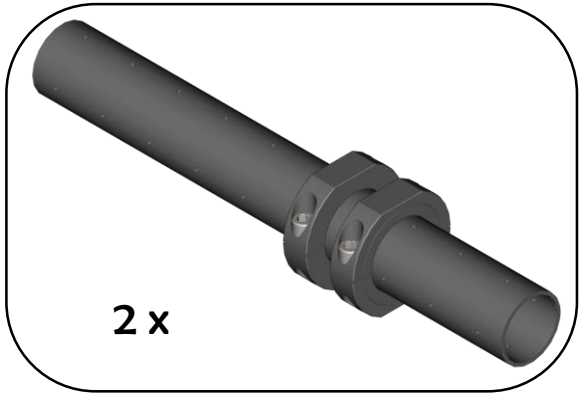
2 x

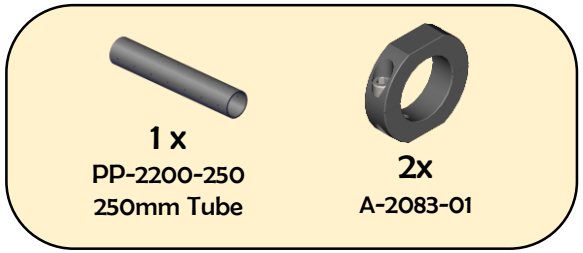
1 x
PP-2200-250
250mm Tube
2x
A-2083-01

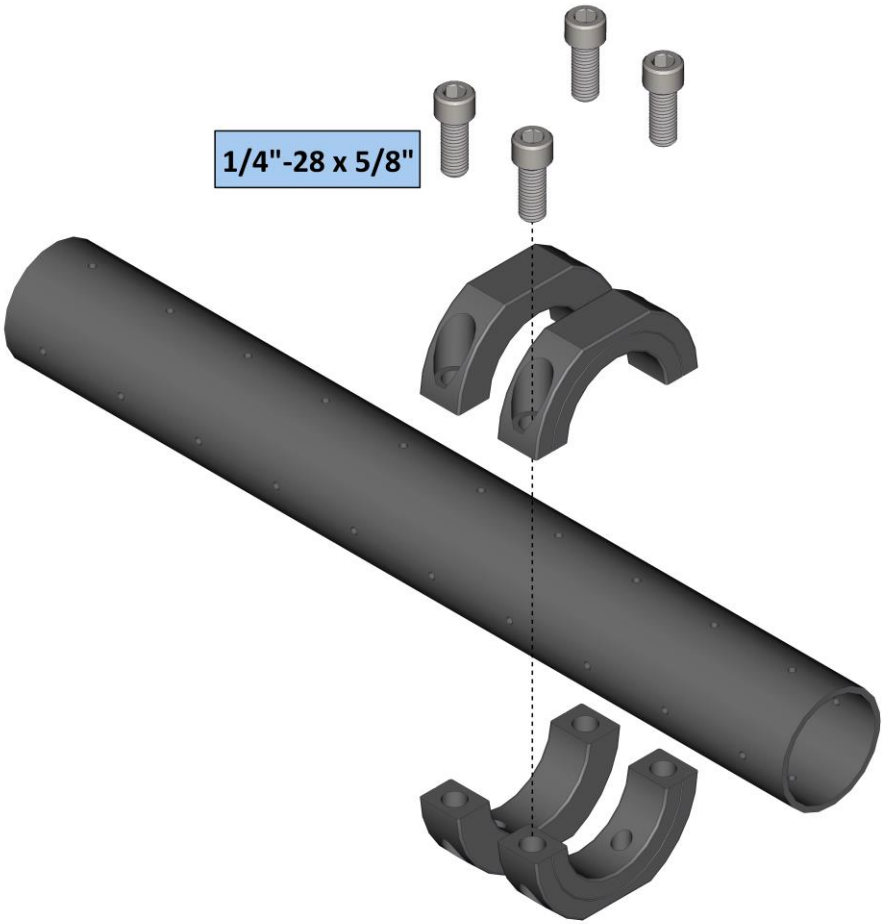
1/4"-28 x 5/8"

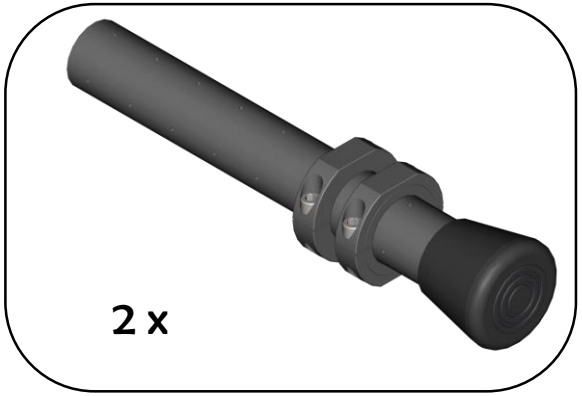
2 x

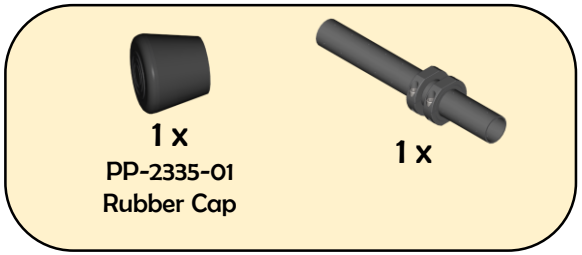
1 x
PP-2335-01
Rubber Cap
1 x

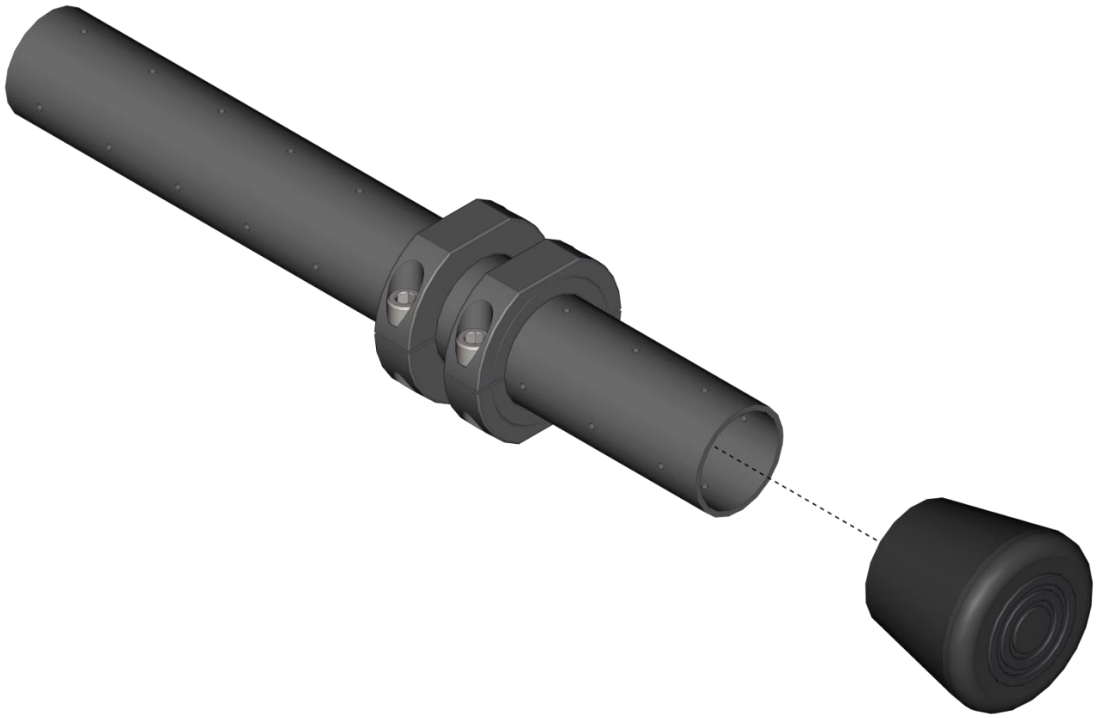

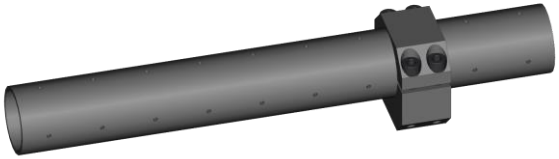

2 x

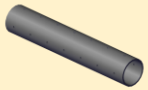

1 x
PP-2200-250
250mm Tube

1 x
A-2188-01

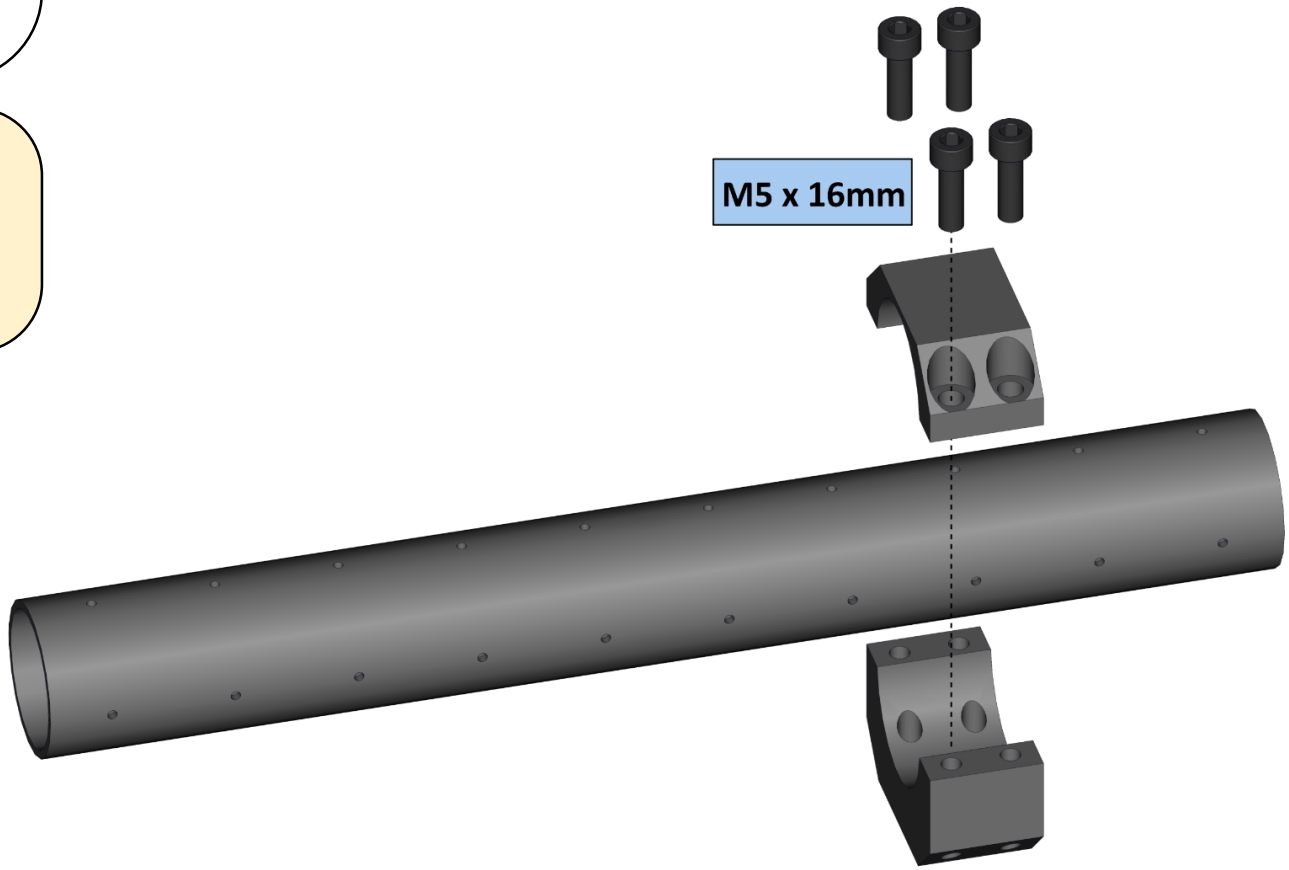

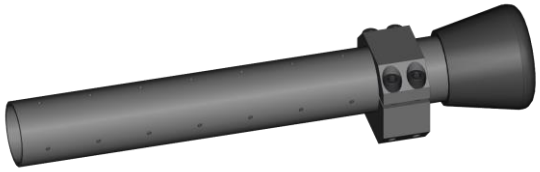

2 x

1 x
PP-2335-01
Rubber Cap

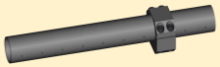

1 x

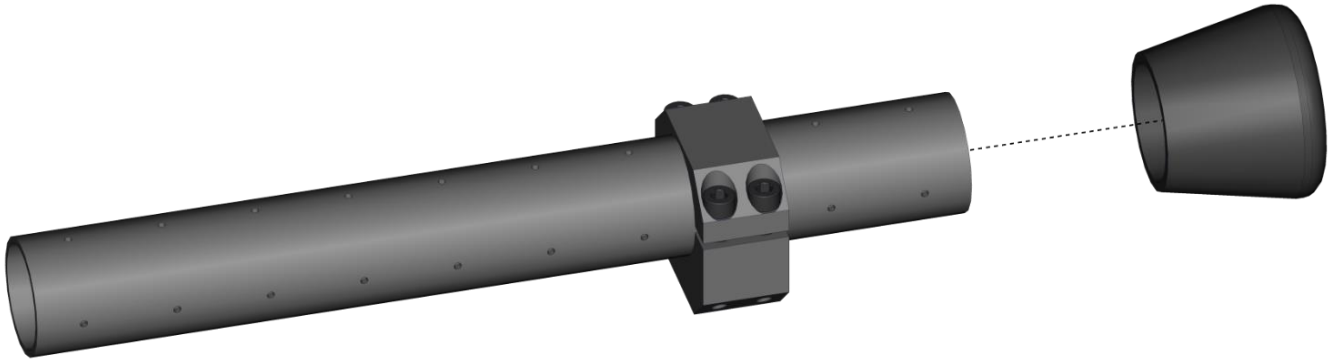

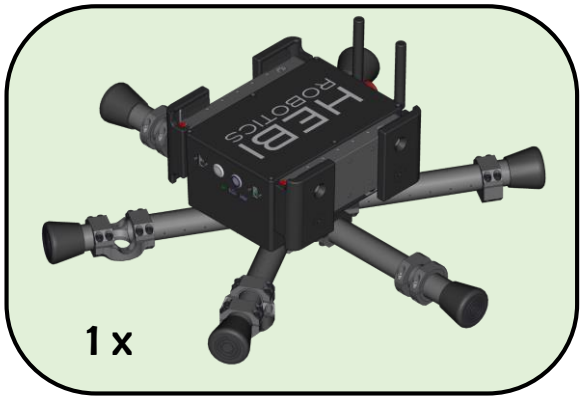
1 x

2 x
2 x
2 x
1 x
A-2095-01
1 x
A-2096-01
1 x
A-2173-01
Wireless Chassis Assembly

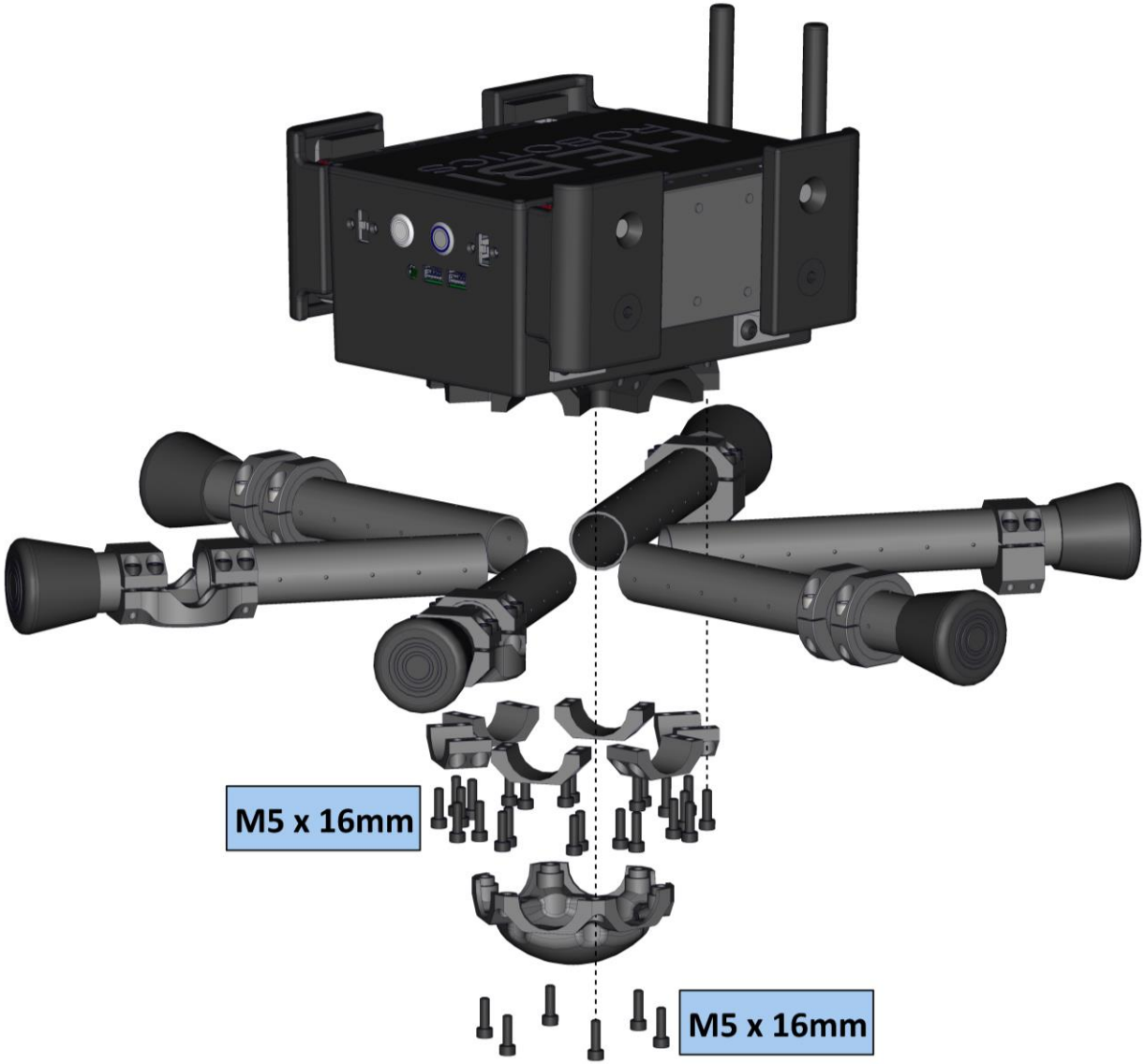
M5 x 16mm
M5 x 16mm

Left Leg

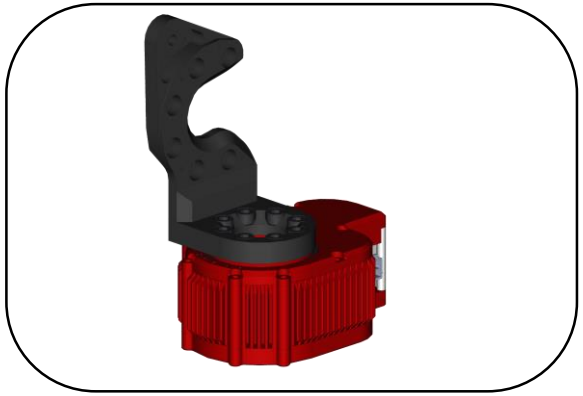

1 x
X8-9

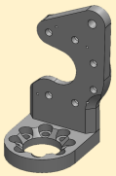

1 x
A-2070-01R

M5 x 12mm

Step 2 of 2

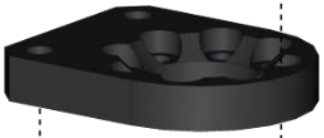

M6 x 12mm

Step 1 of 2

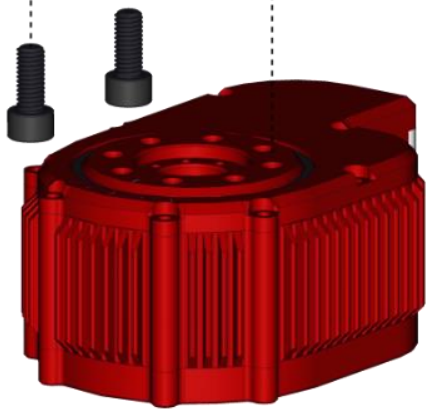

Hip1 (X8-9)

Align with actuator output hub tick mark
(inside face parallel with tick mark and spring mounting hole going forward)

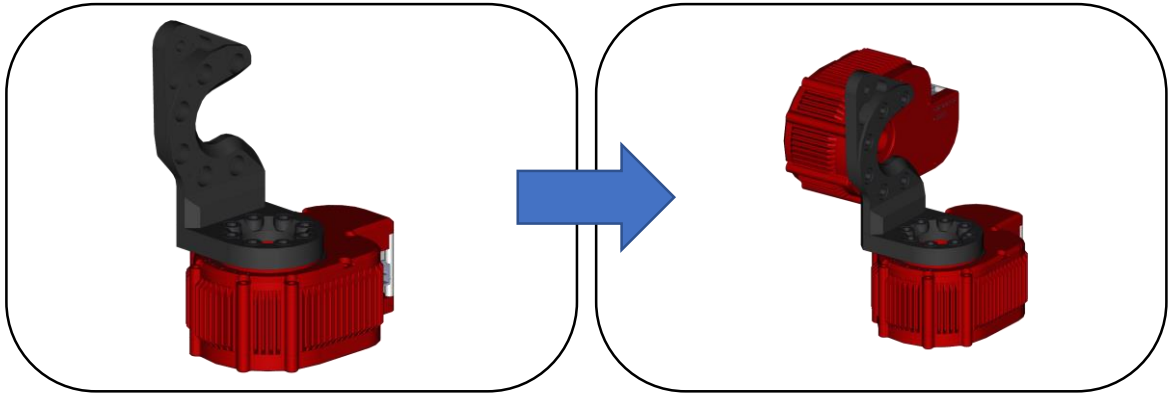

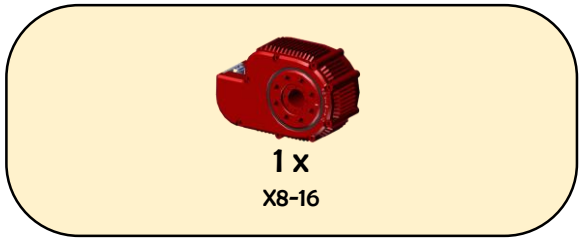
1 x
X8-16

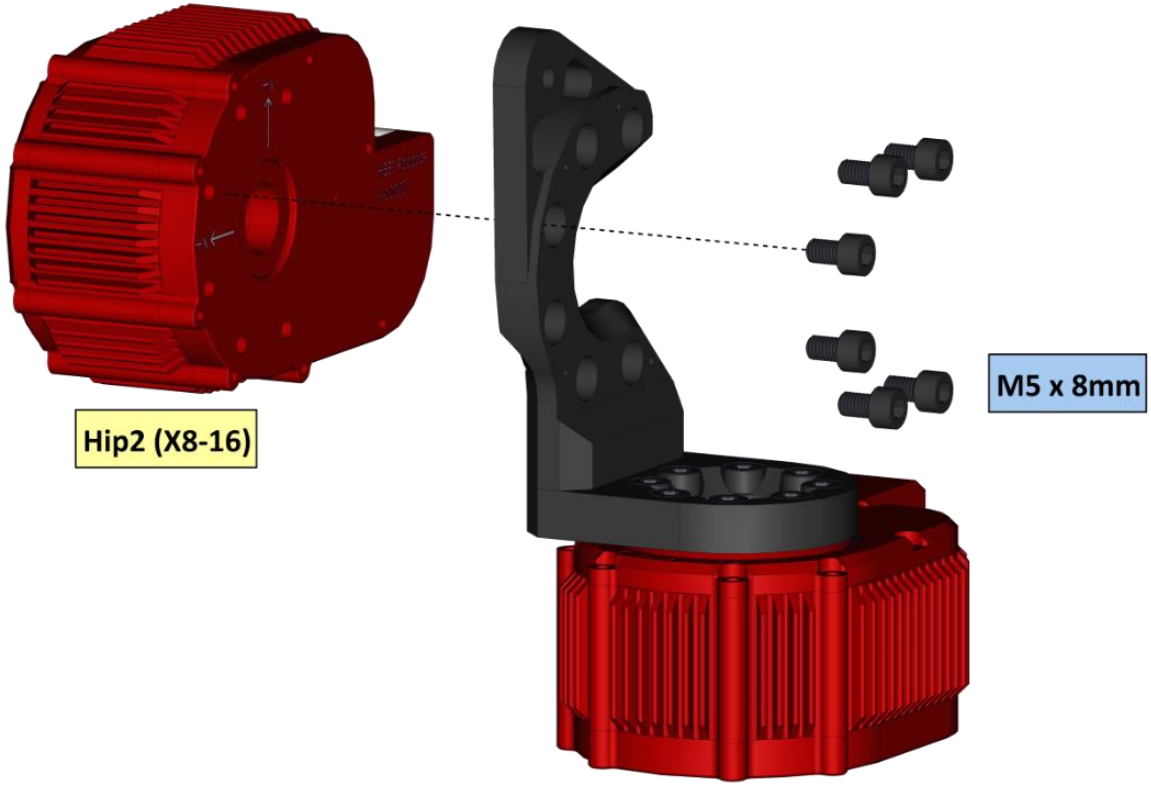
Hip2 (X8-16)
M5 x 8mm

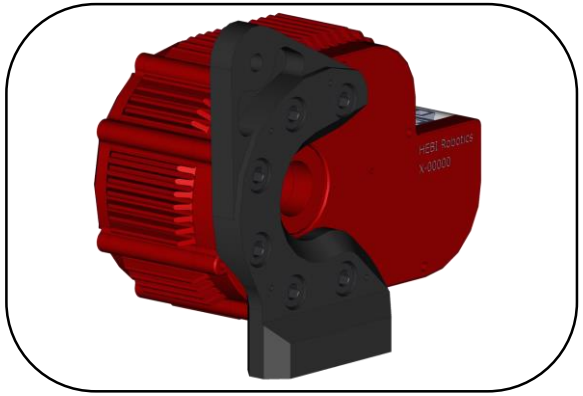

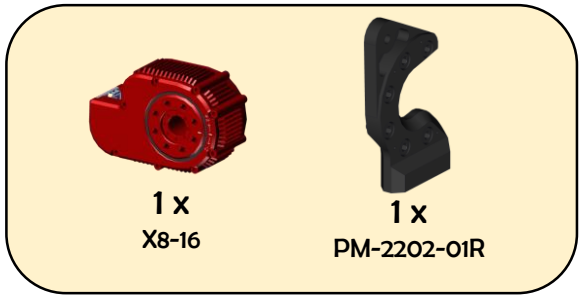
1 x
X8-16
1 x
PM-2202-01R

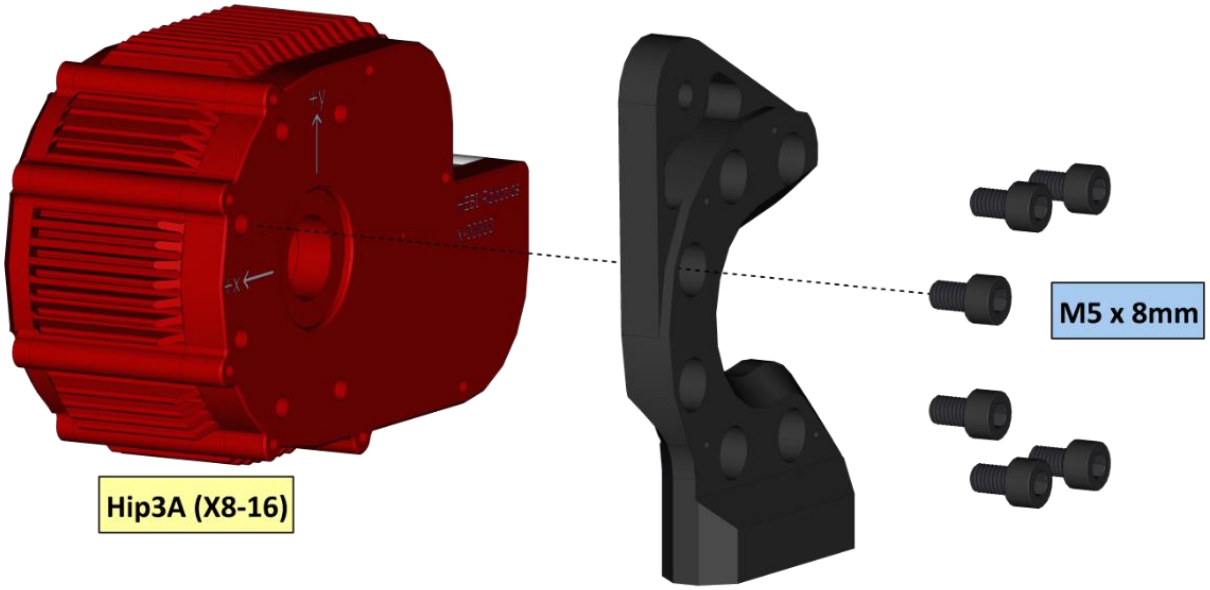
M5 x 8mm
Hip3A (X8-16)

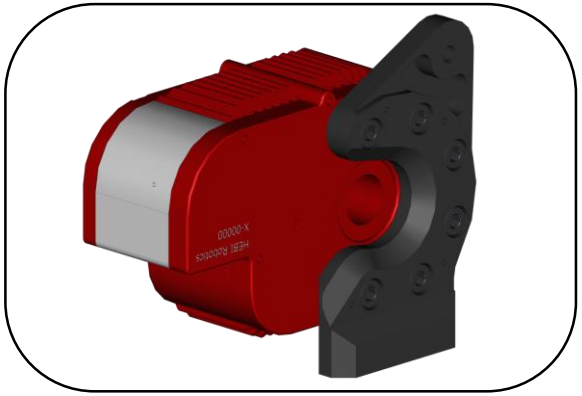

1 x
X8-9

1 x
PM-2202-01L

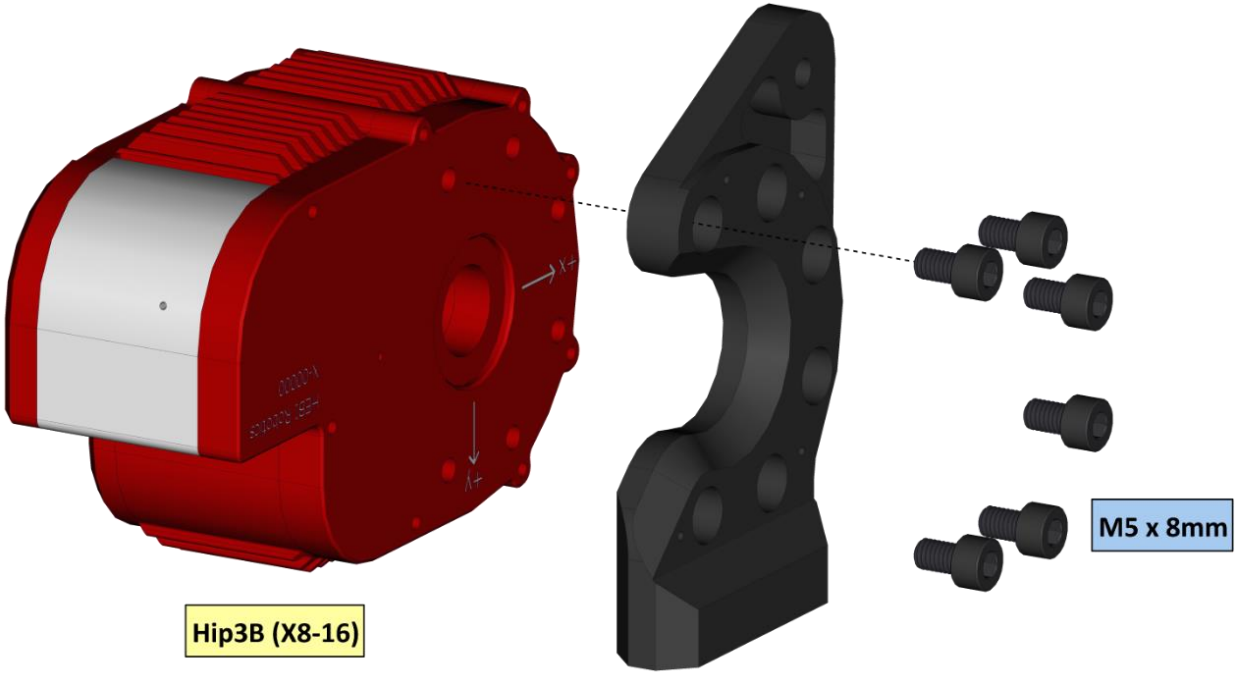

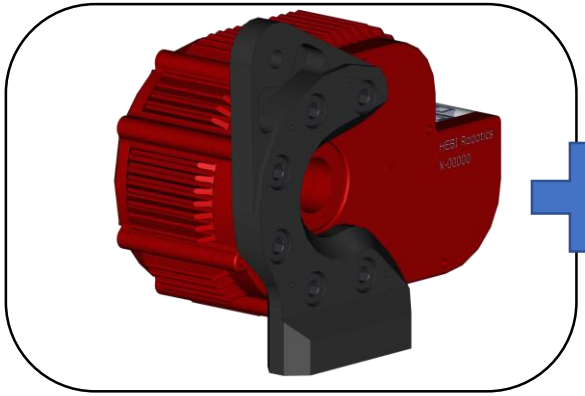

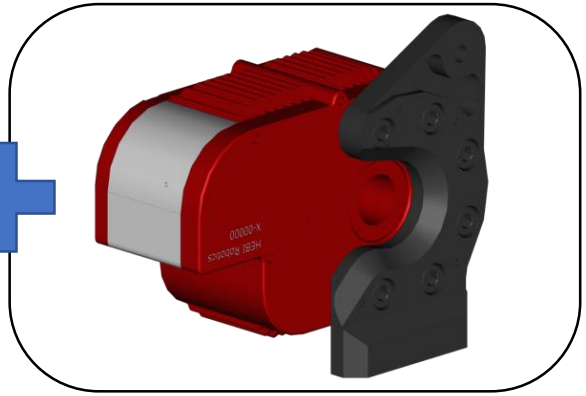

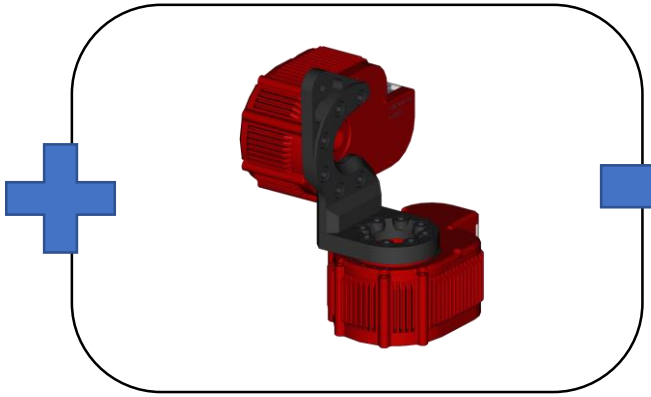

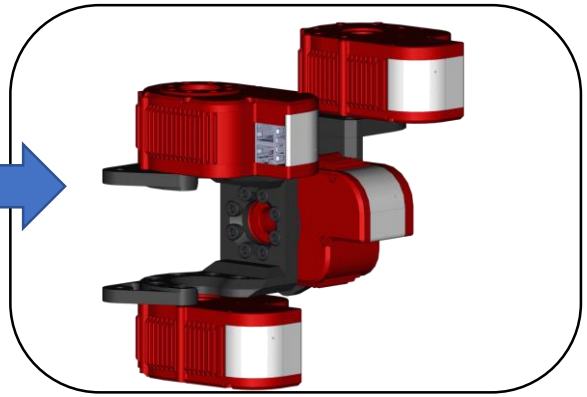

Align with actuator output hub tick mark

(Tube aligns with tick mark)

1 x

A-2070-01LR

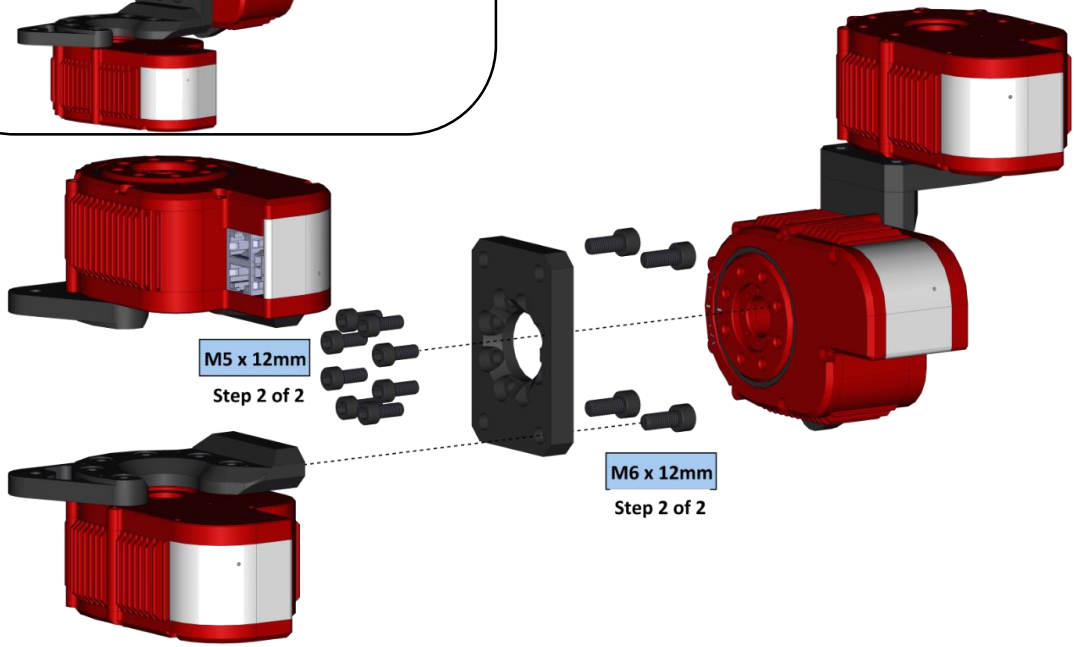

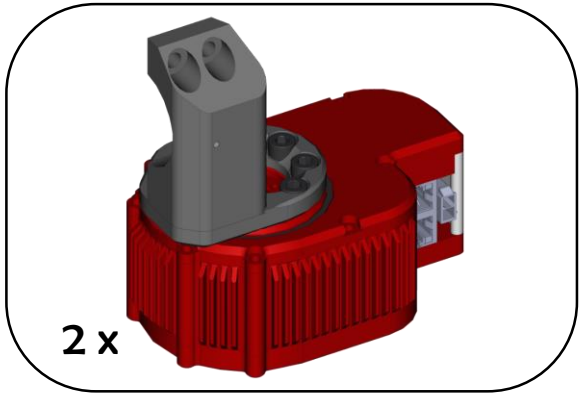

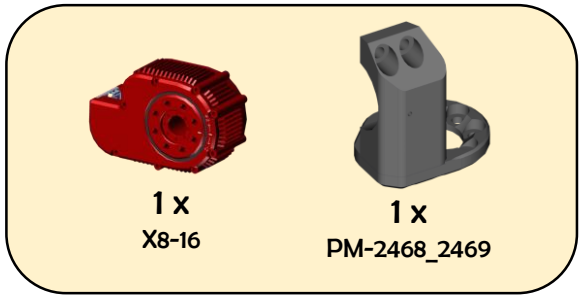

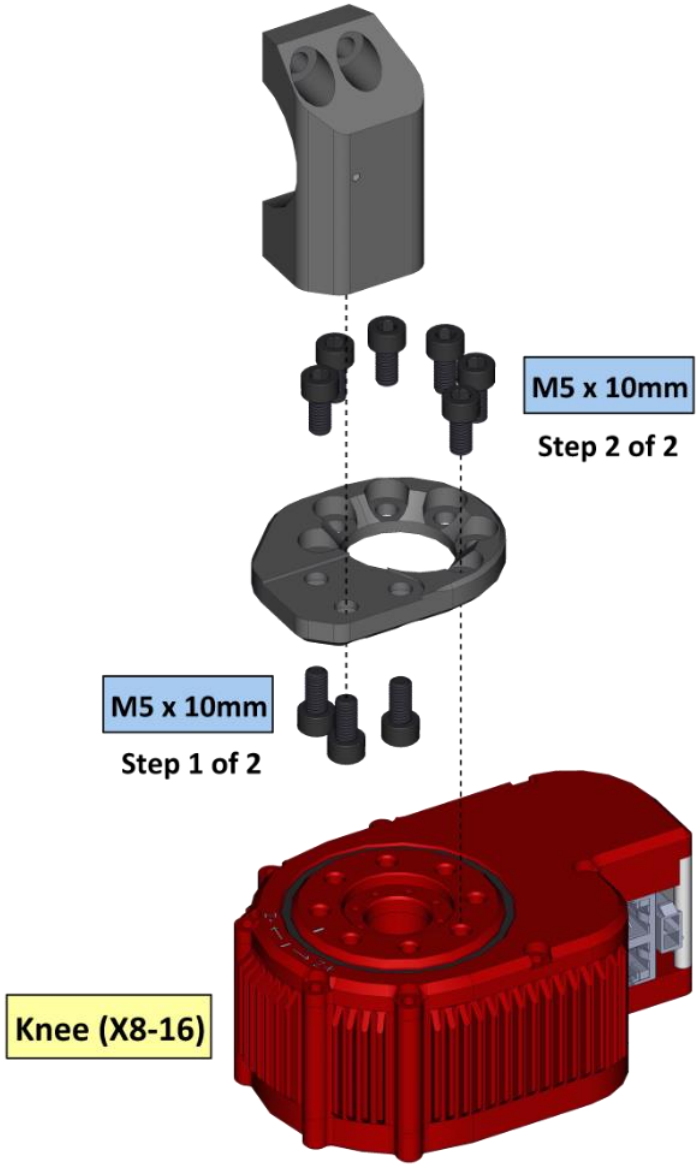

Align with actuator output hub tick mark
(inside face parallel with tick mark and spring mounting hole going forward)

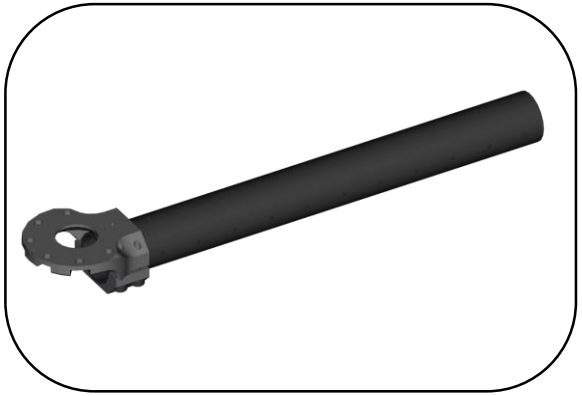

1 x
PP-2200-02
300mm Tube

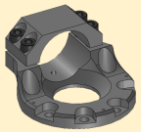

12 x
A-2039-02

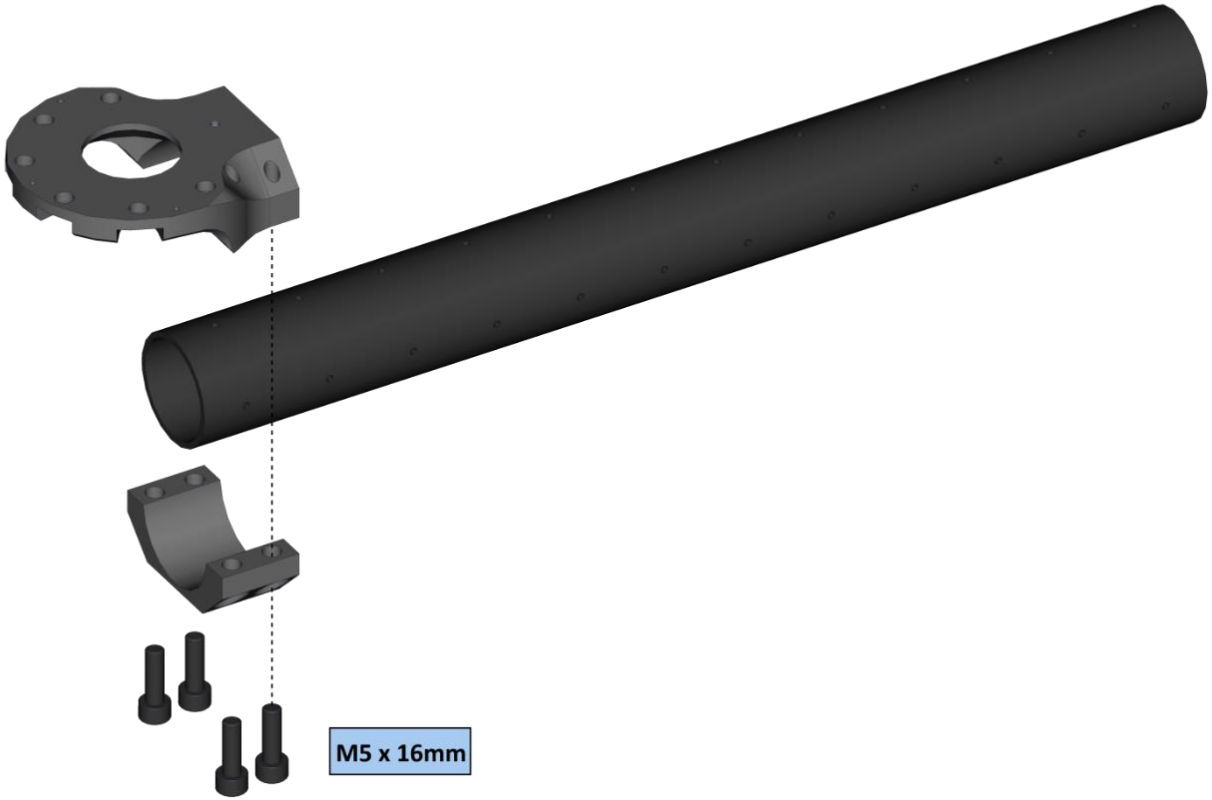

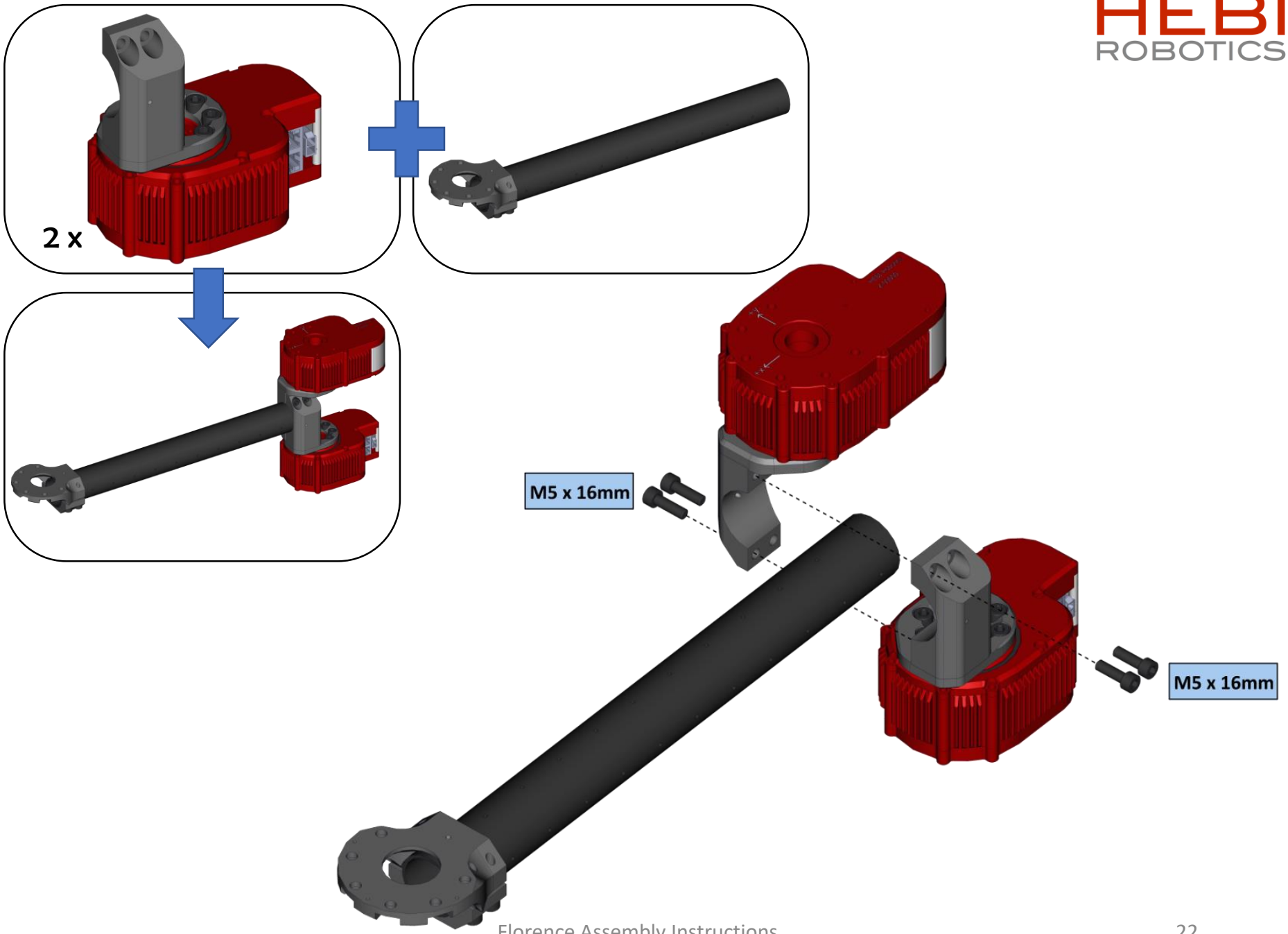
2 x
M5 x 16mm
M5 x 16mm

2 x

1 x
PP-2200-02
300mm Tube

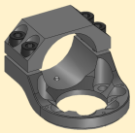

1 x
A-2038-02

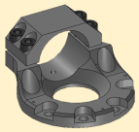

1 x
A-2039-02

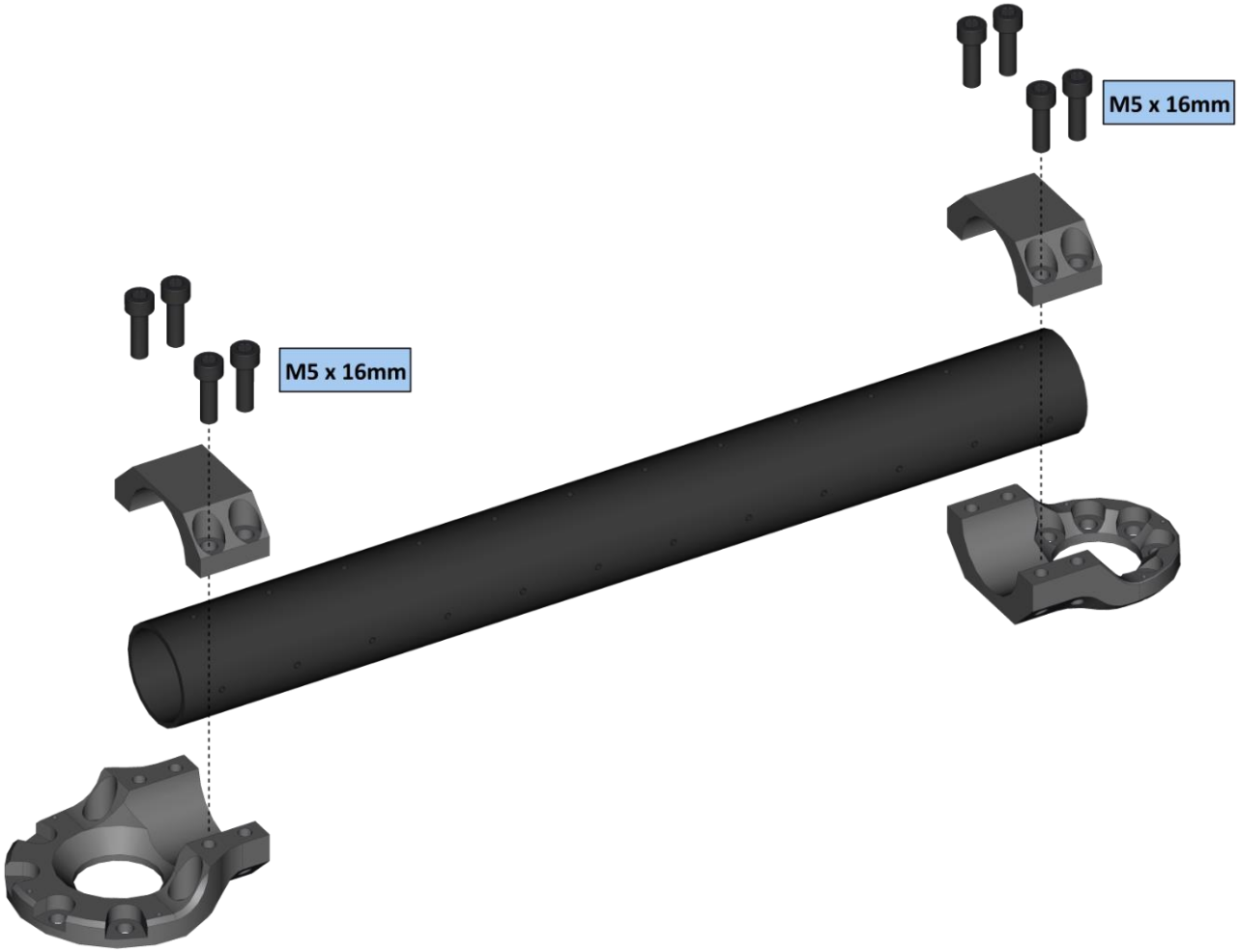

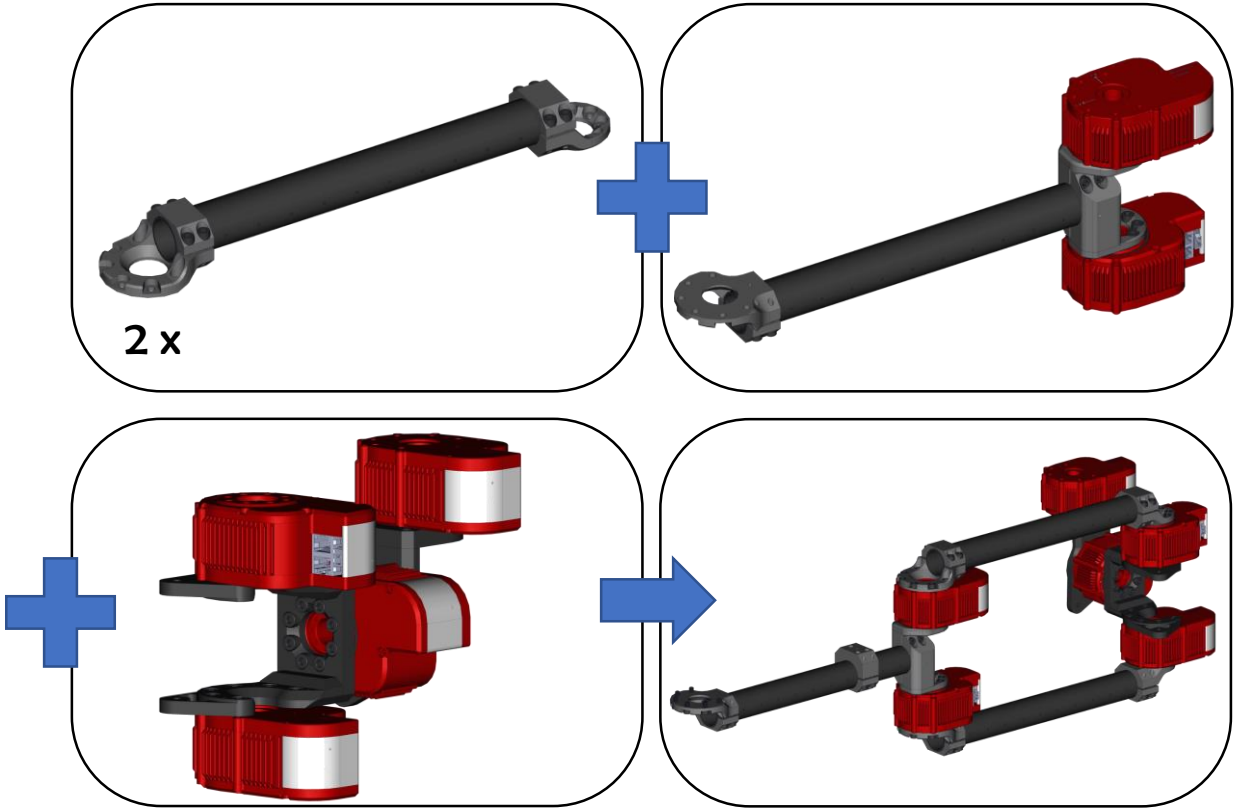
2 x

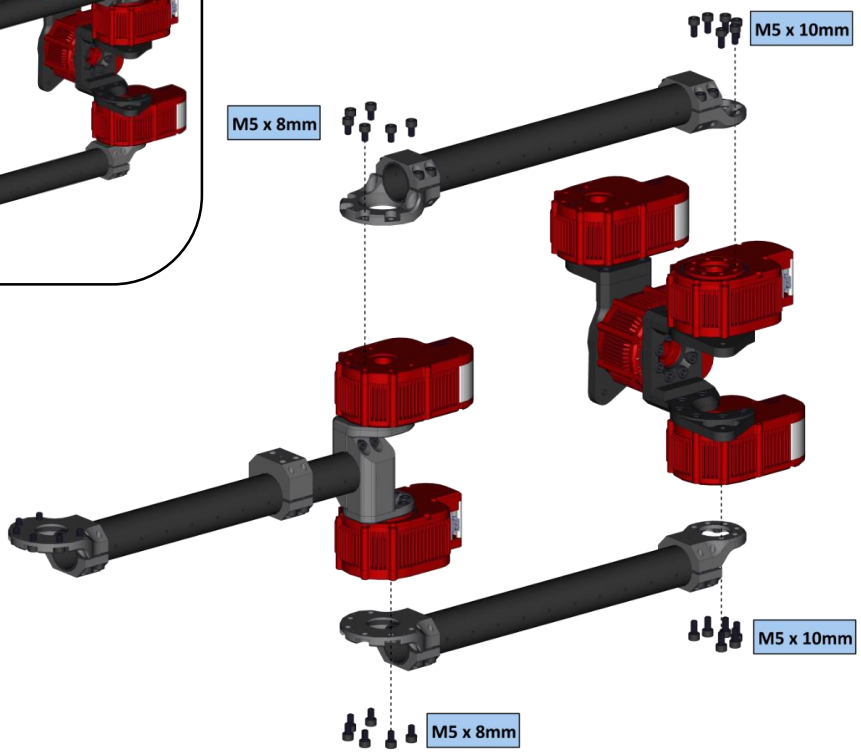
M5 x 10mm
M5 x 8mm
M5 x 10mm
M5 x 8mm

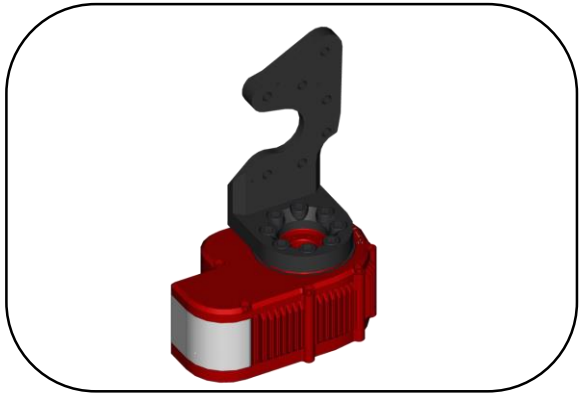

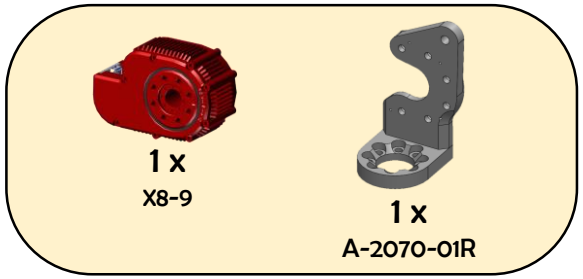
1 x
X8-9
1 x
A-2070-01R

M5 x 12mm
Step 2 of 2
M6 x 12mm
Step 1 of 2
Ankle2 (X8-9)

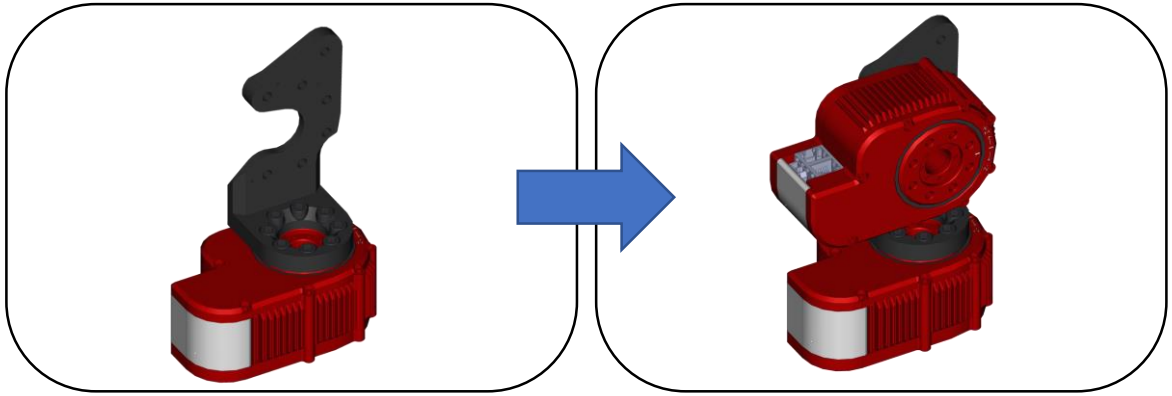

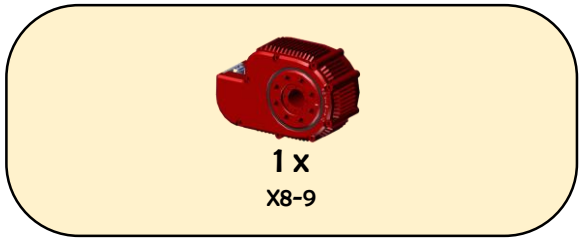
1 x
X8-9

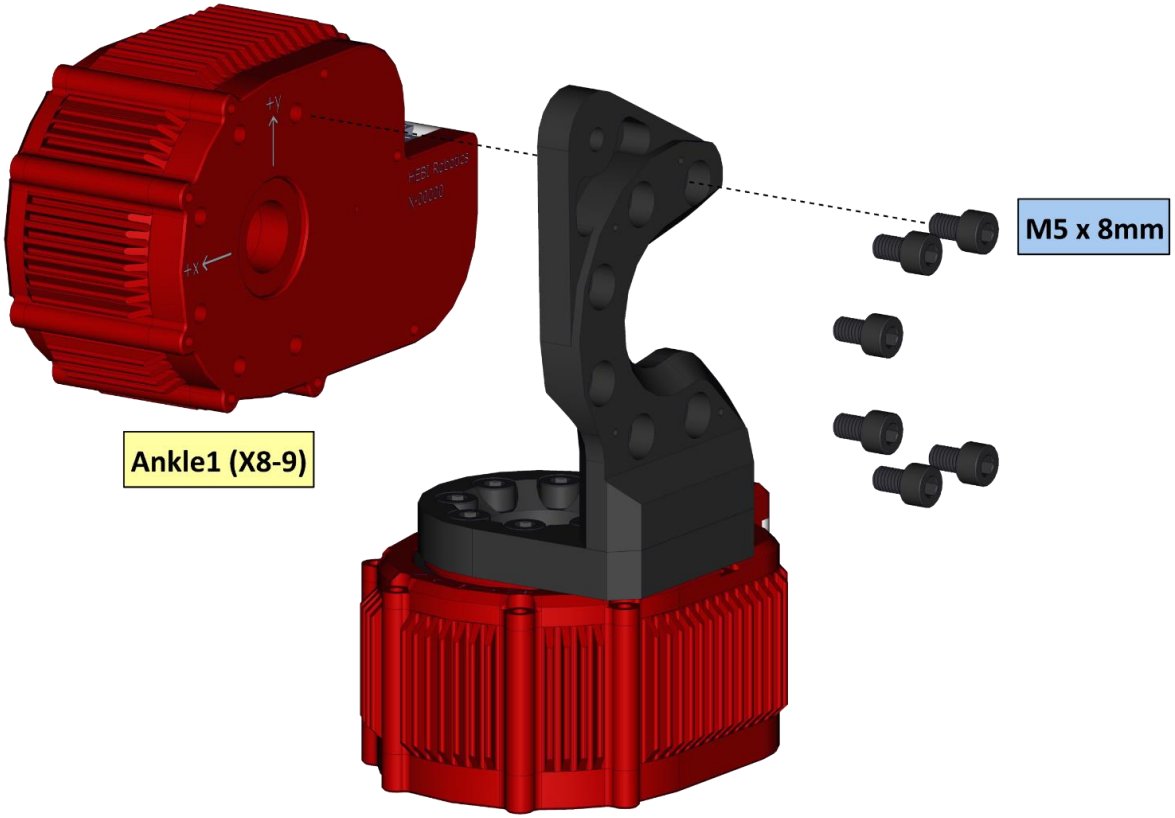
M5 x 8mm
Ankle1 (X8-9)

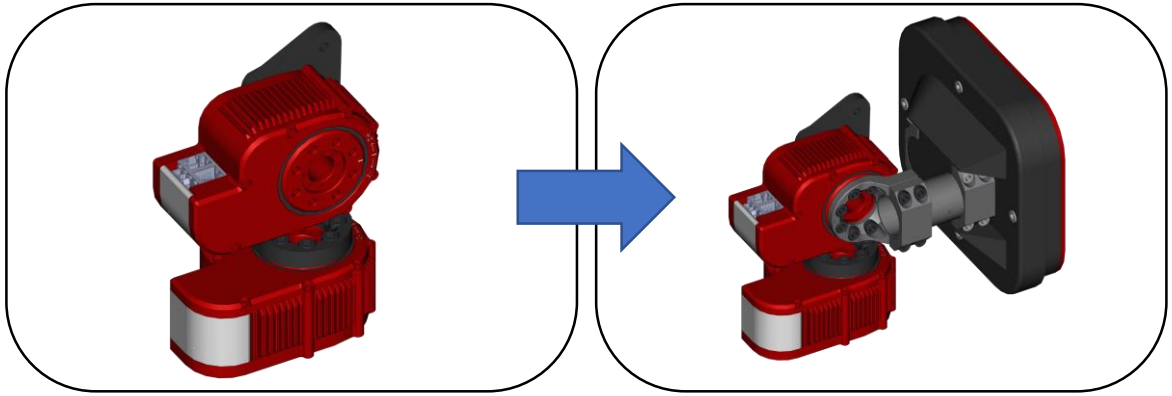

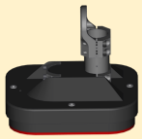

1 x

A-2211-01

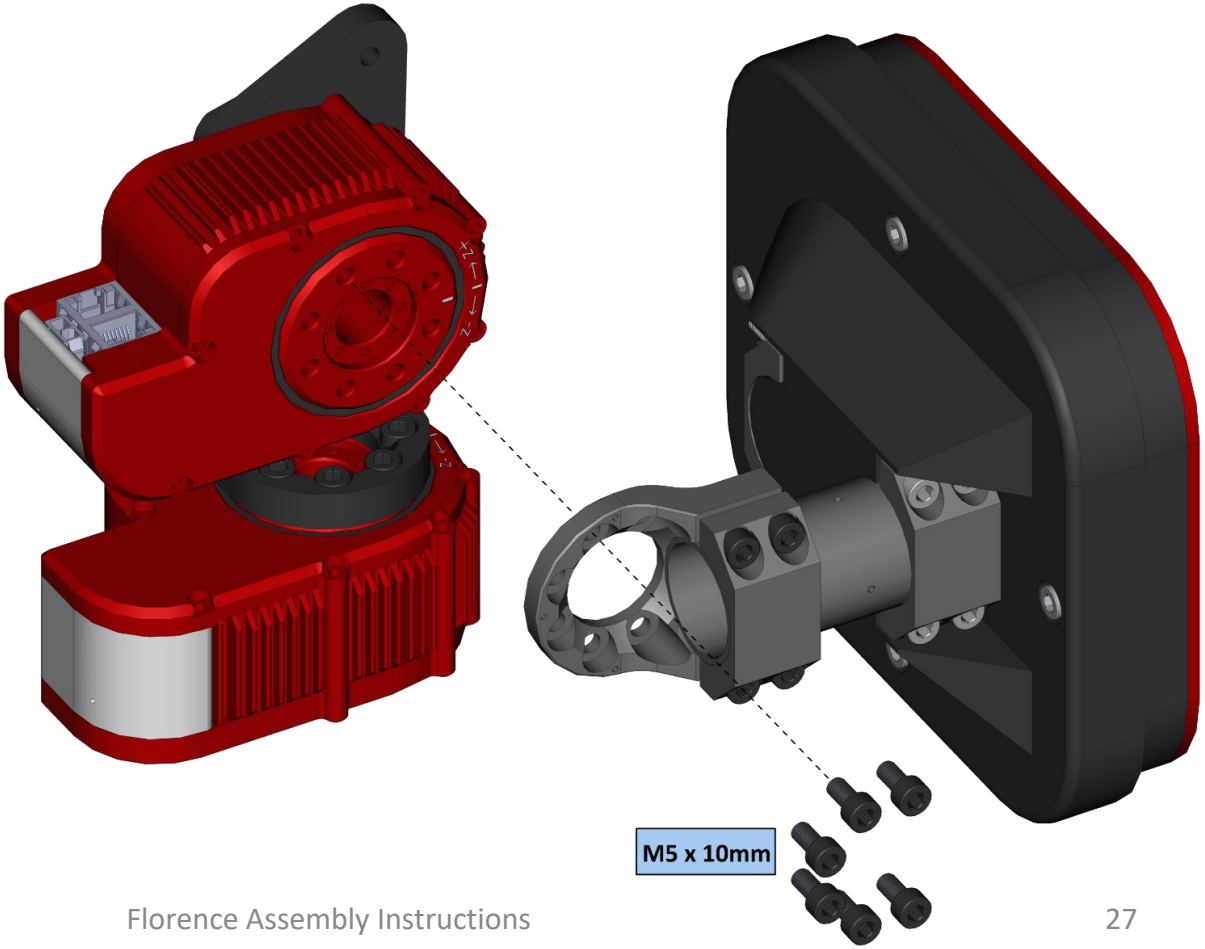

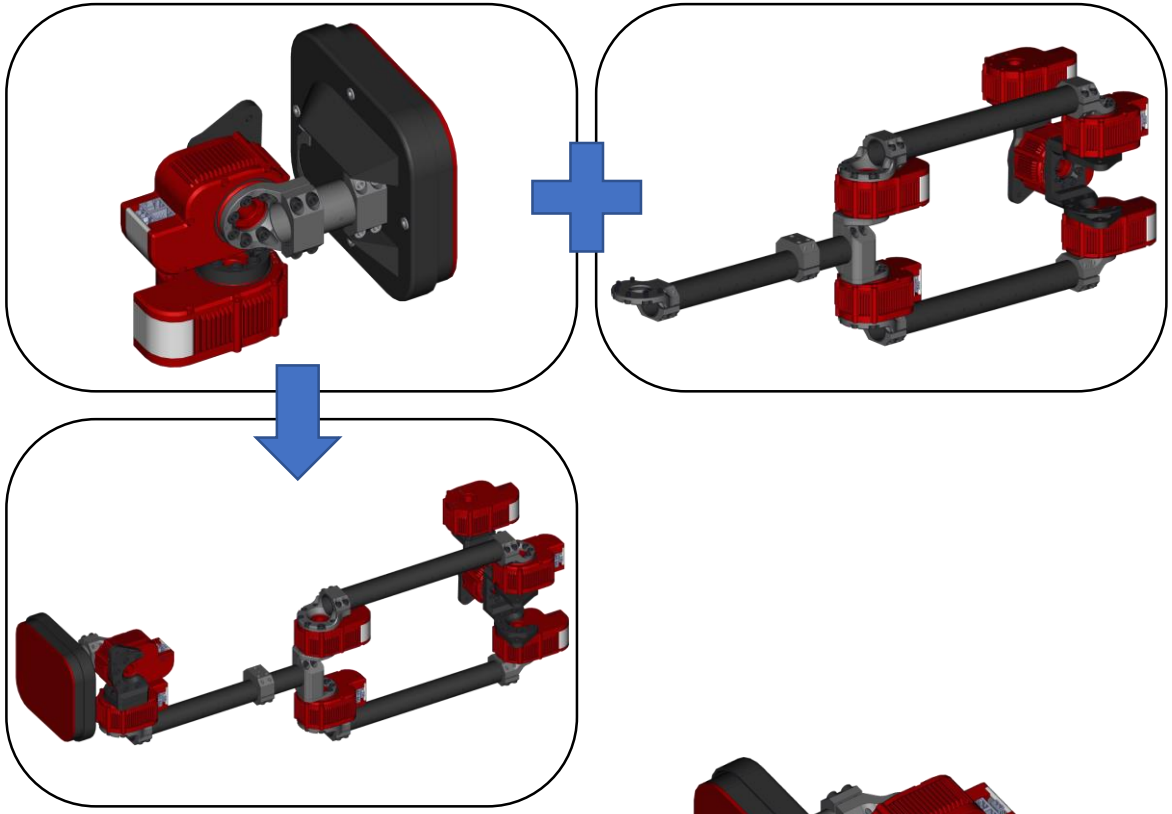

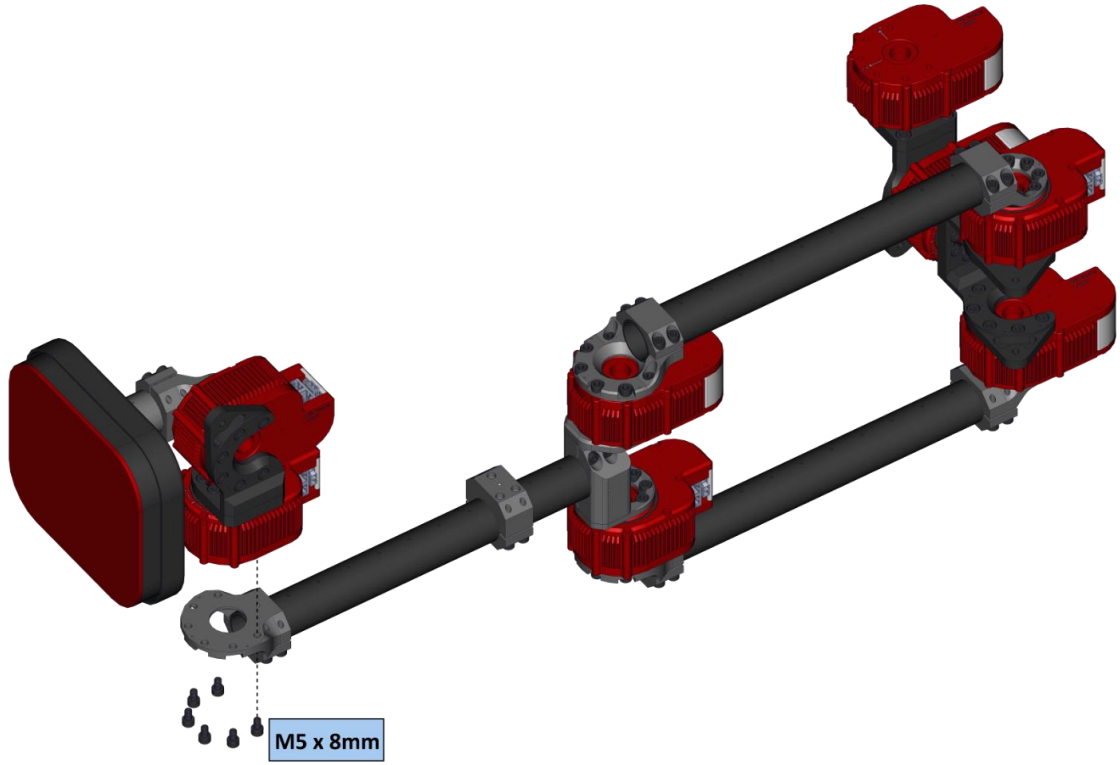
M5 x 8mm

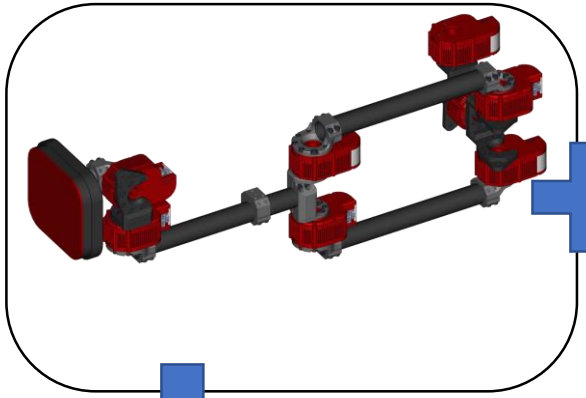

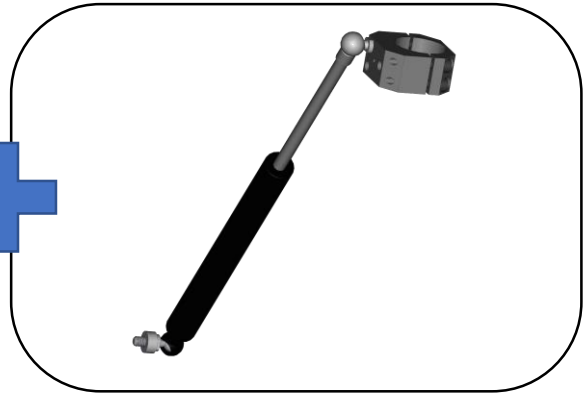

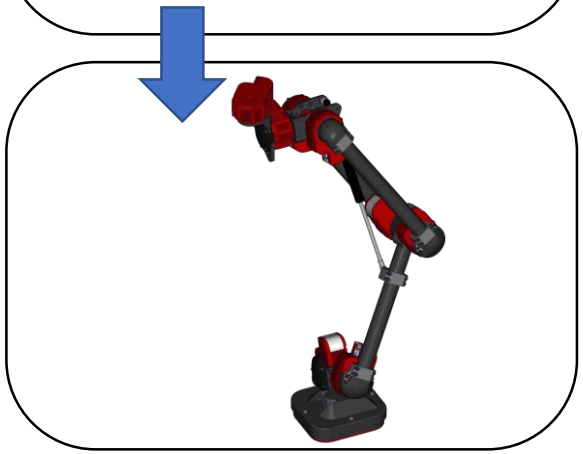

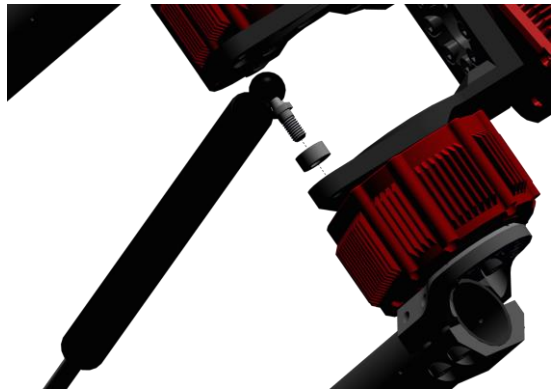

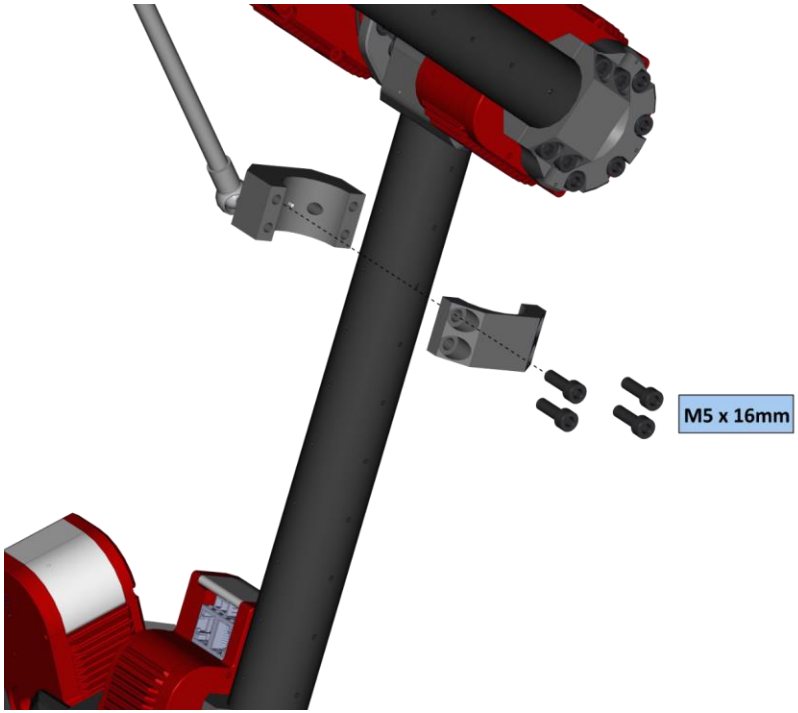

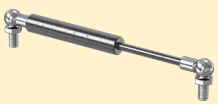

1 x
A-2088-60-20
(Gas Spring – 20lbs.)

1 x
A-2188-01

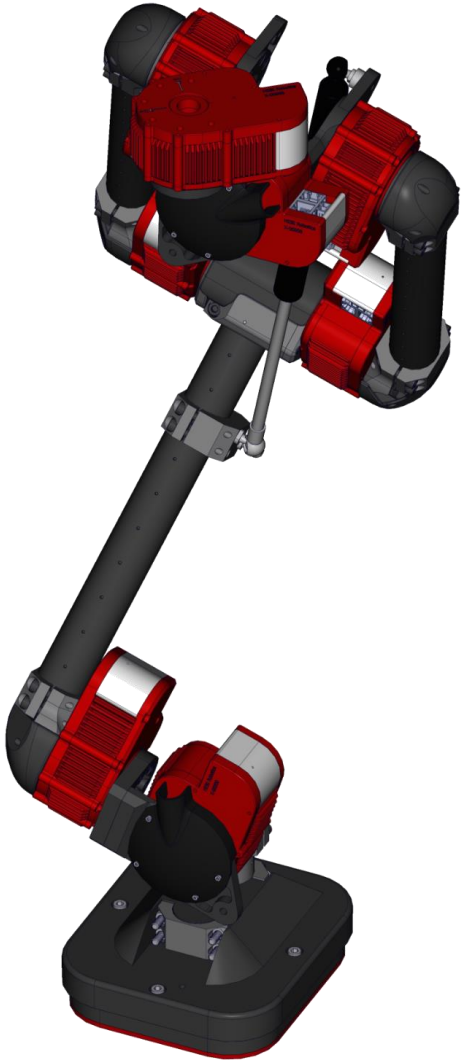

Right Leg

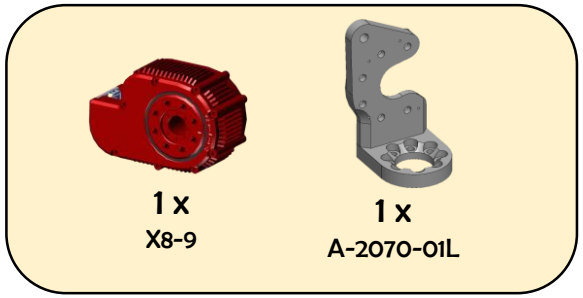

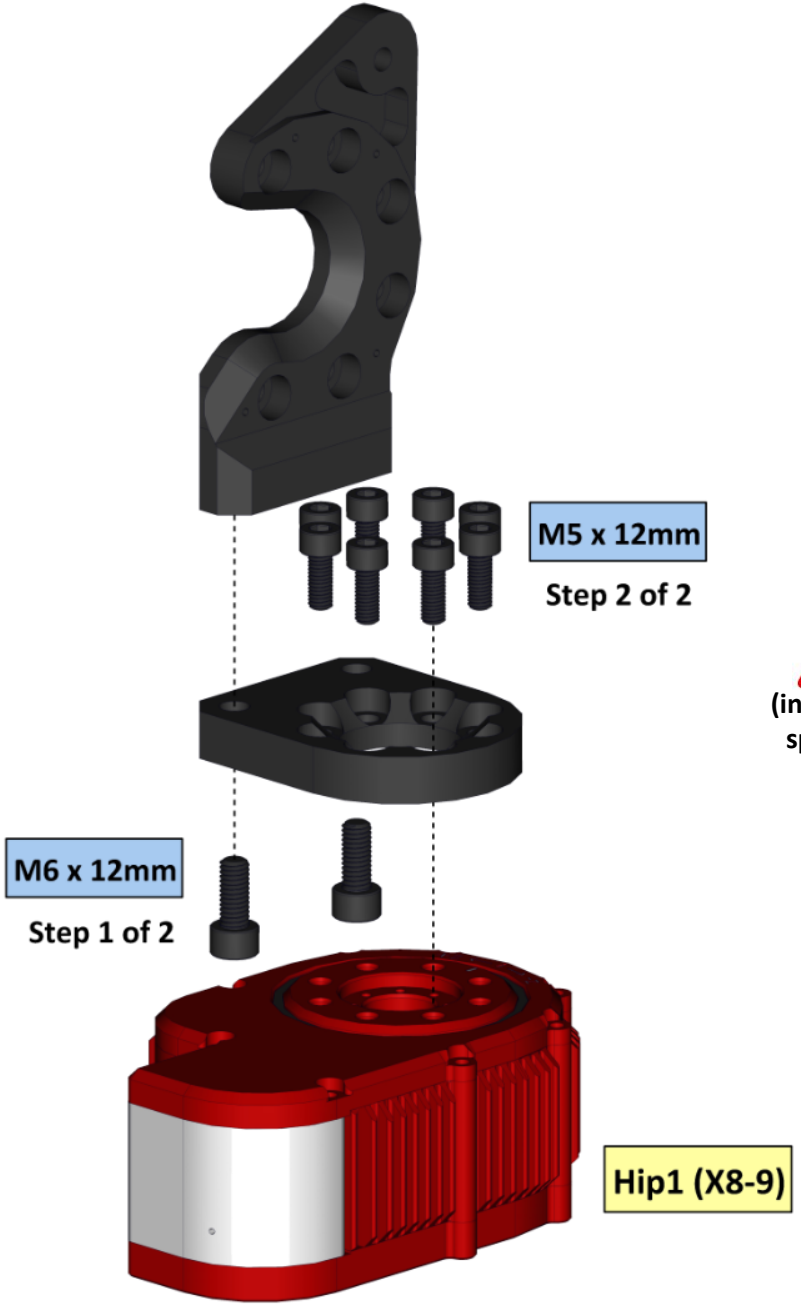

Align with actuator output hub tick mark
(inside face parallel with tick mark and spring mounting hole going forward)

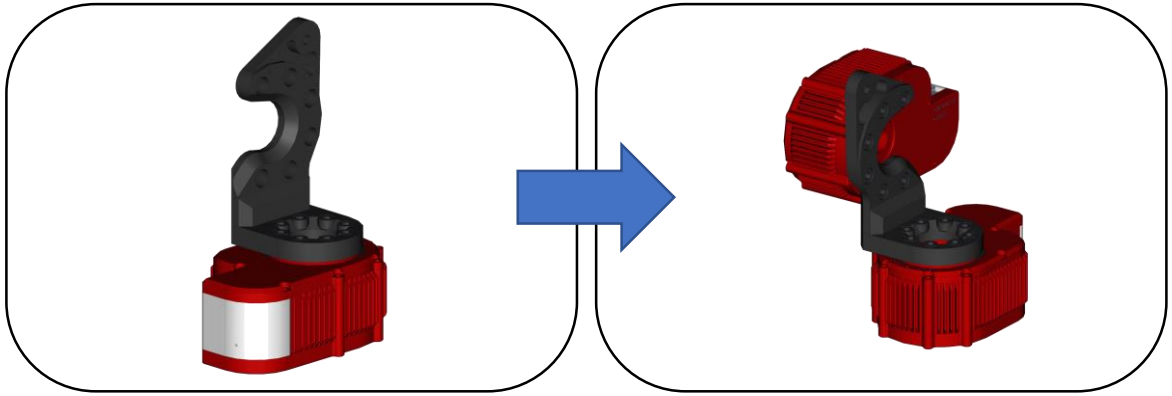

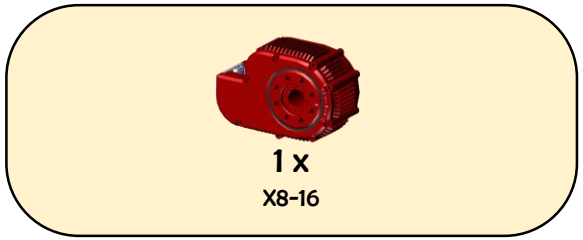
1 x
X8-16

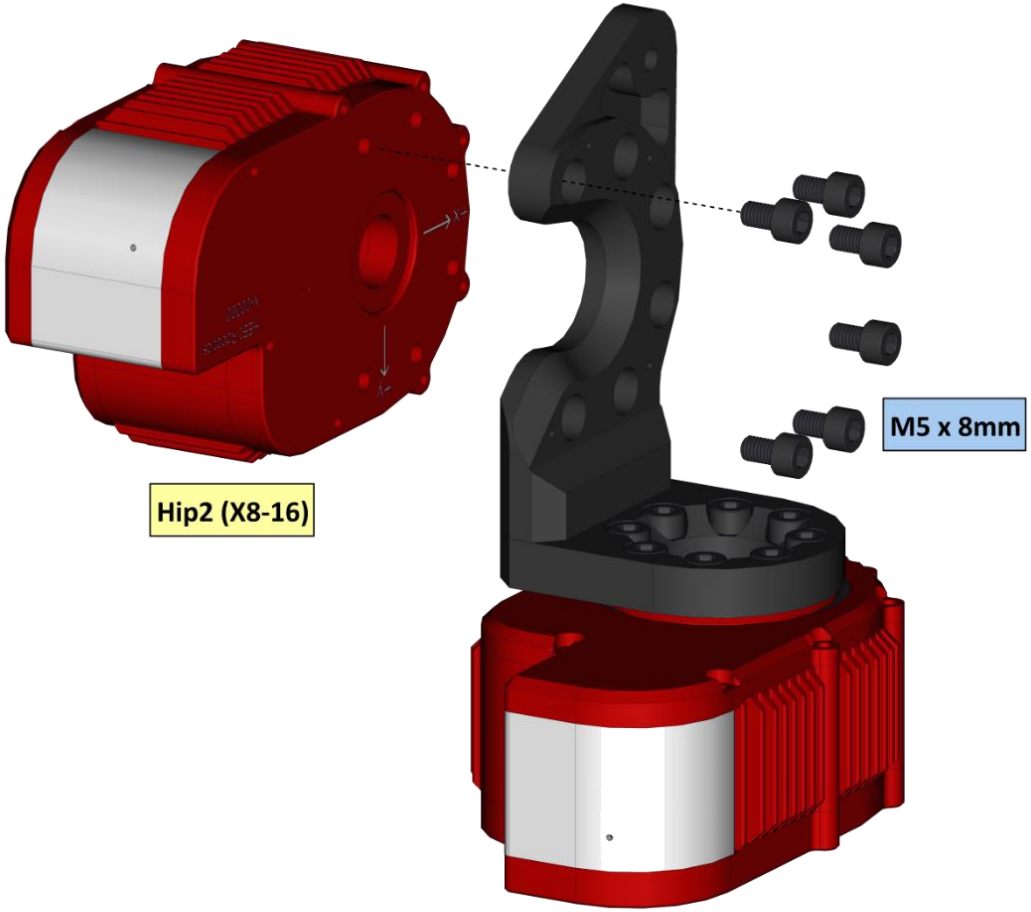
Hip2 (X8-16)
M5 x 8mm

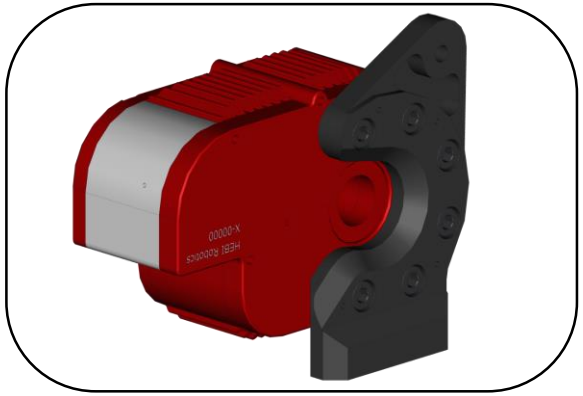

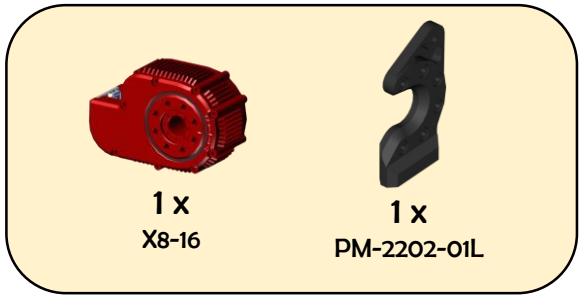
1 x
X8-16
1 x
PM-2202-01L

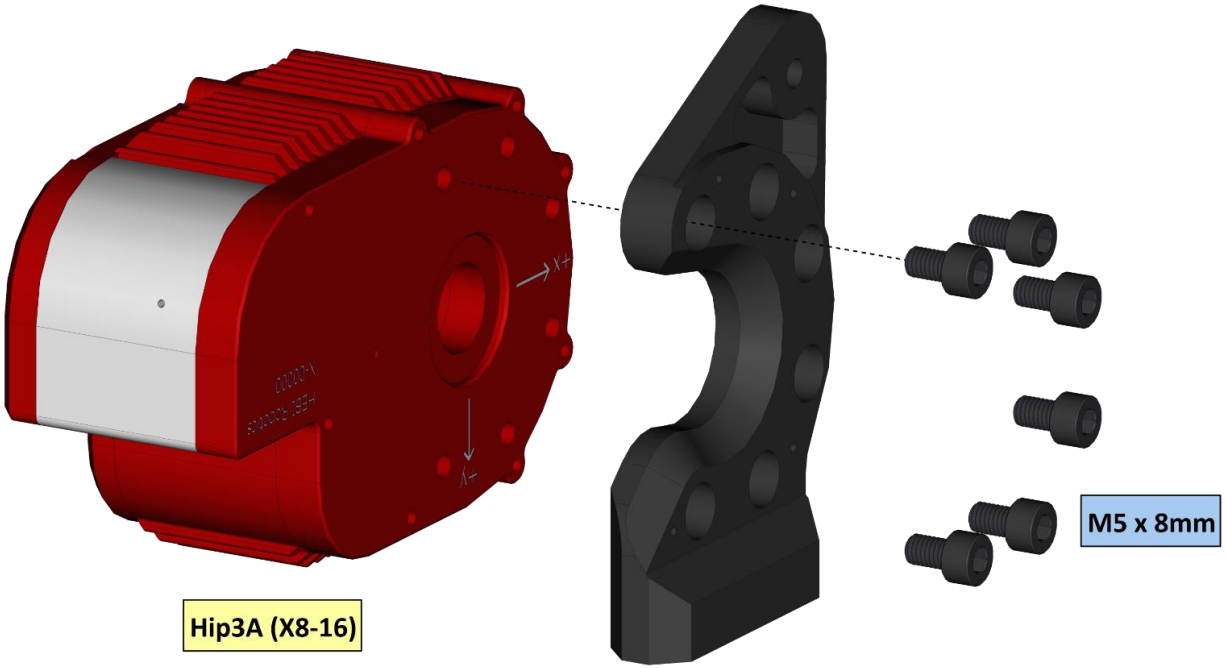
Hip3A (X8-16)
M5 x 8mm

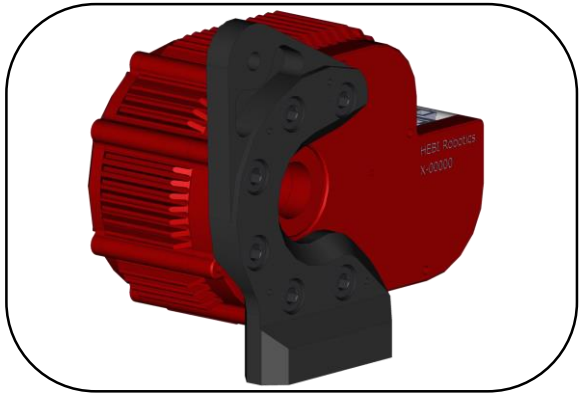

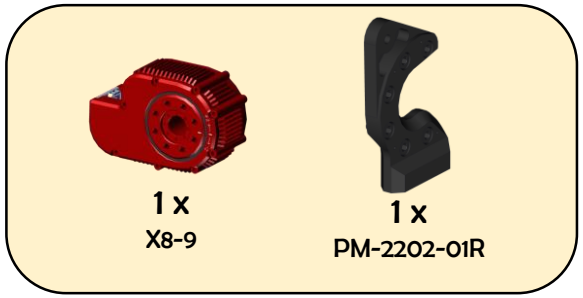
1 x
X8-9
1 x
PM-2202-01R

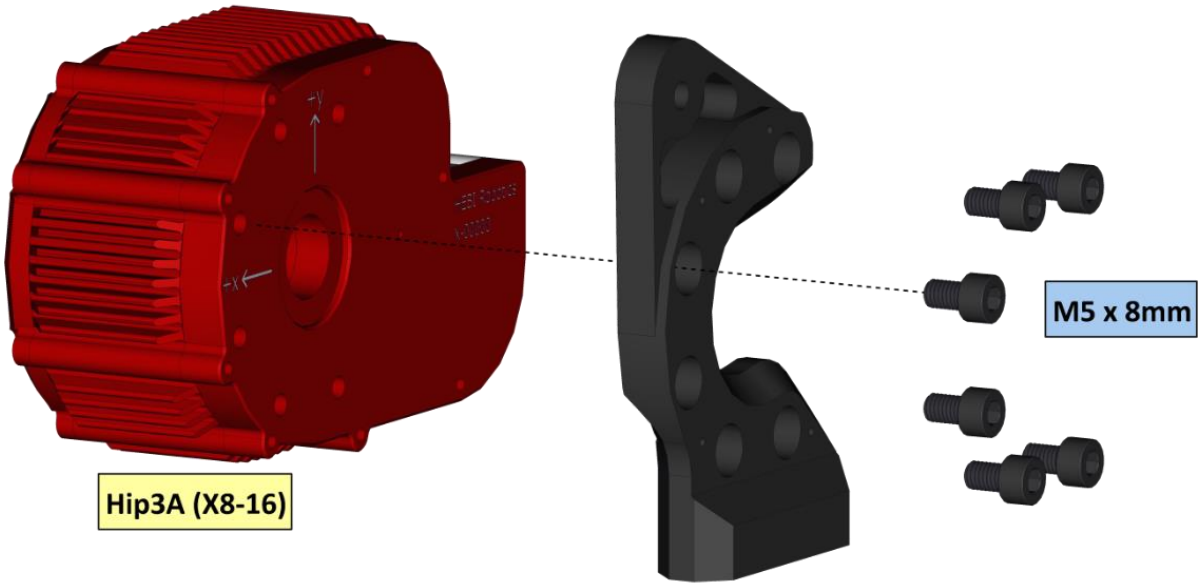
M5 x 8mm
Hip3A (X8-16)

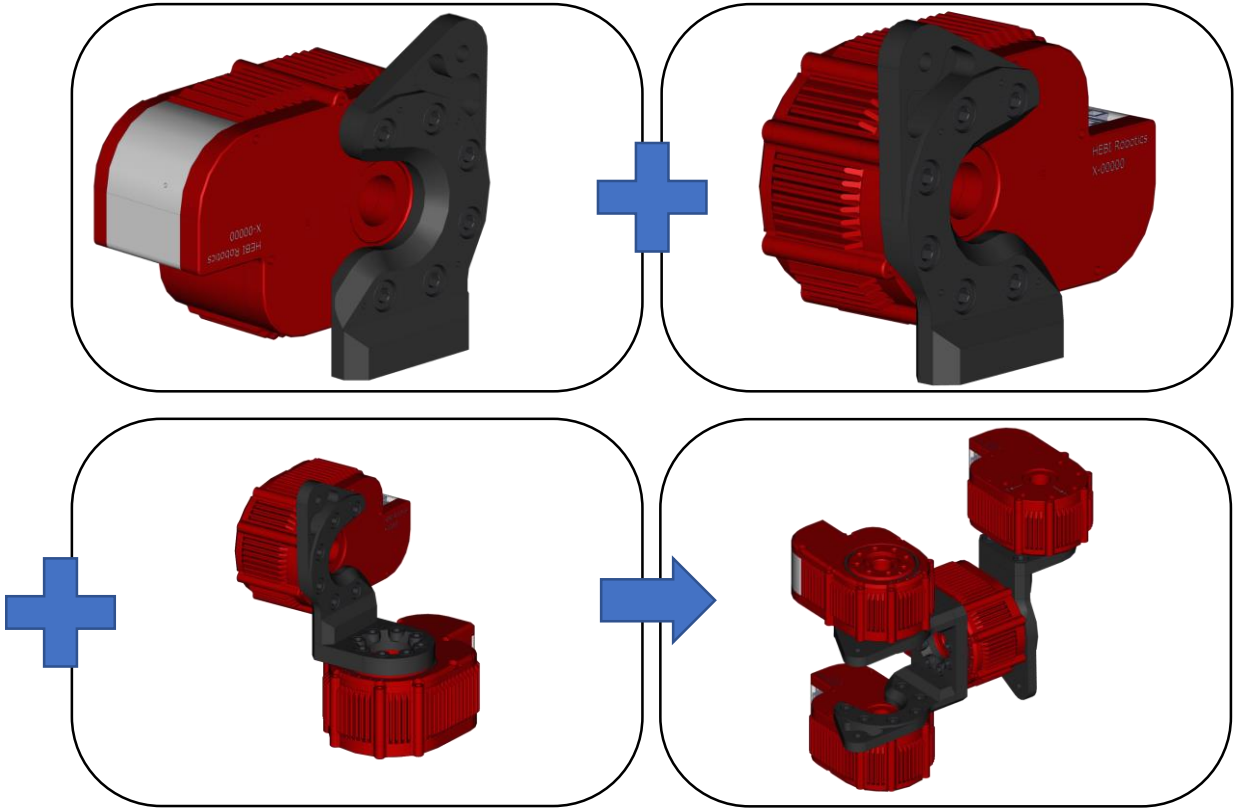

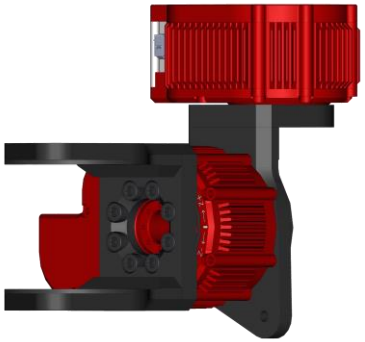

Align with actuator output hub tick mark

(Tube aligns with tick mark)

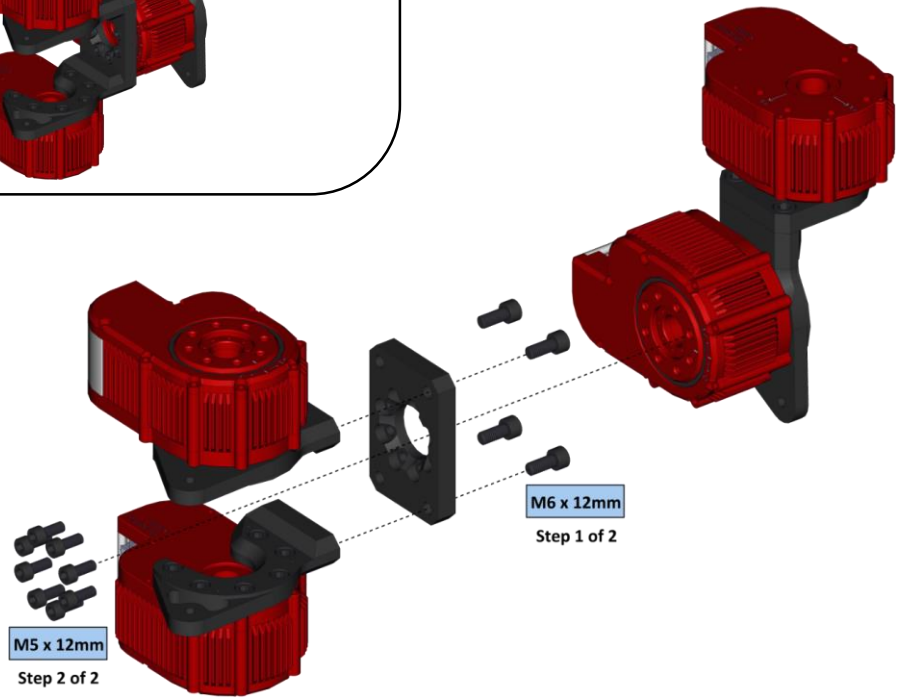

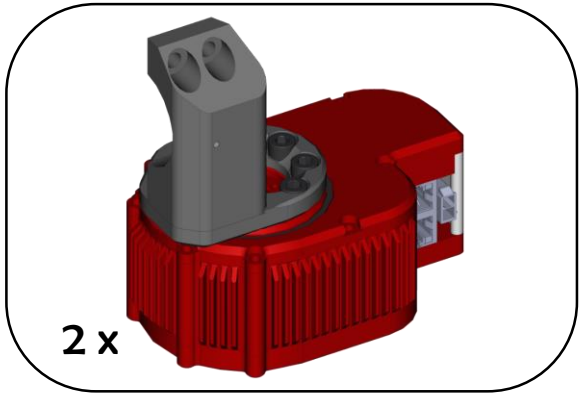

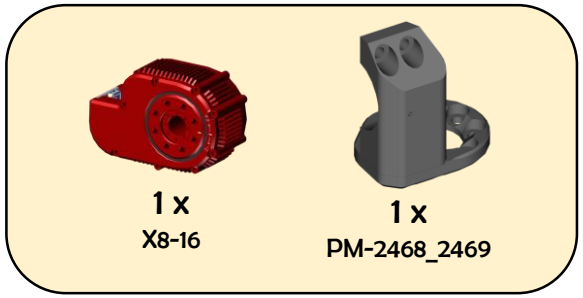

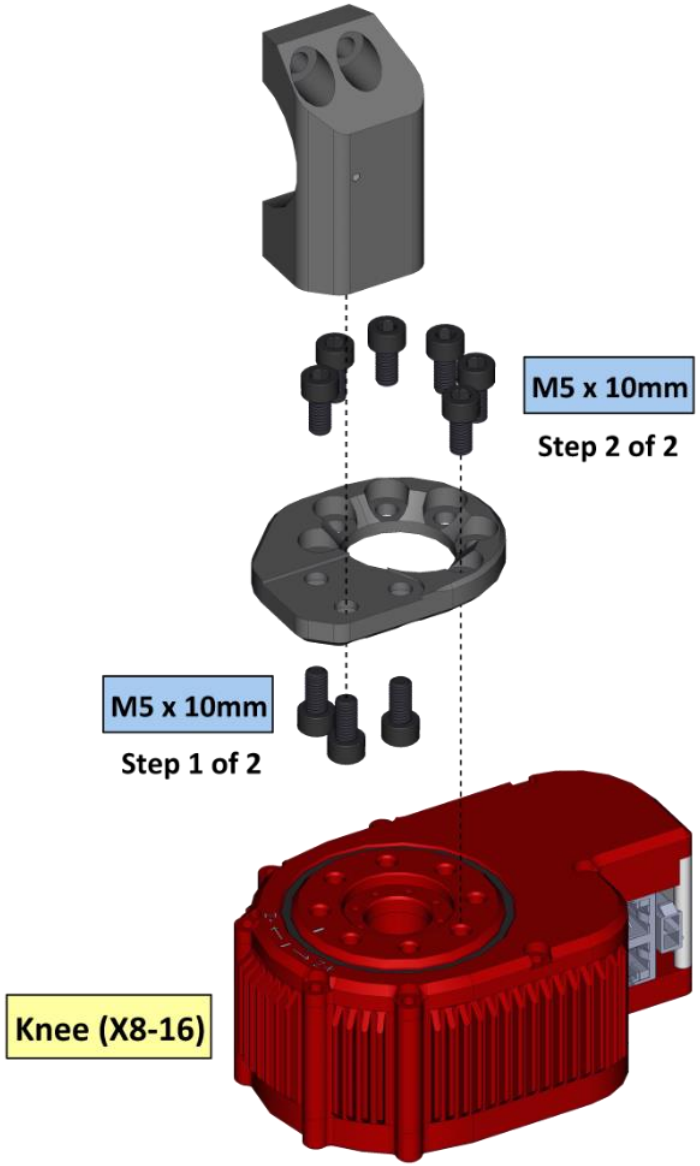

Align with actuator output hub tick mark
(inside face parallel with tick mark and spring mounting hole going forward)

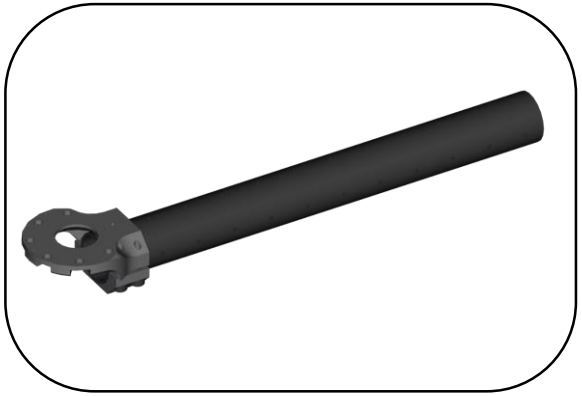

1 x
X8-9

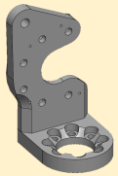

1 x
A-2070-01L

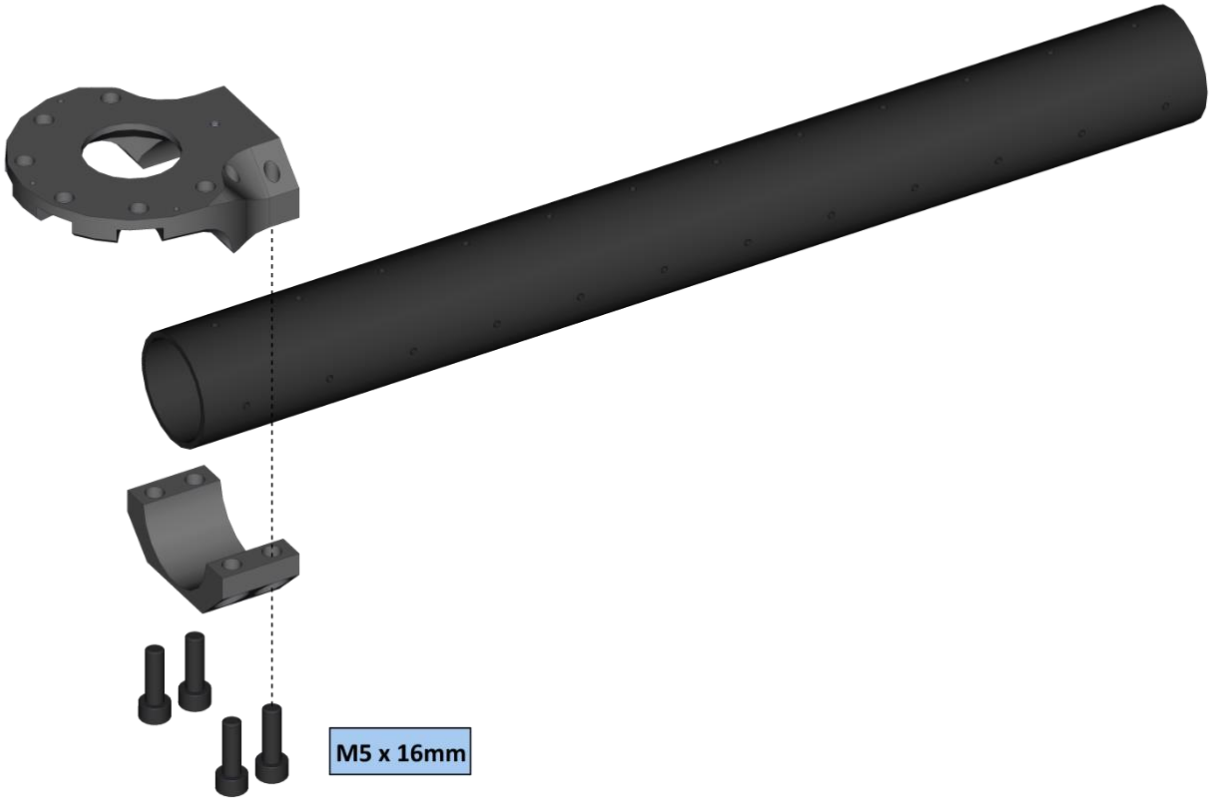

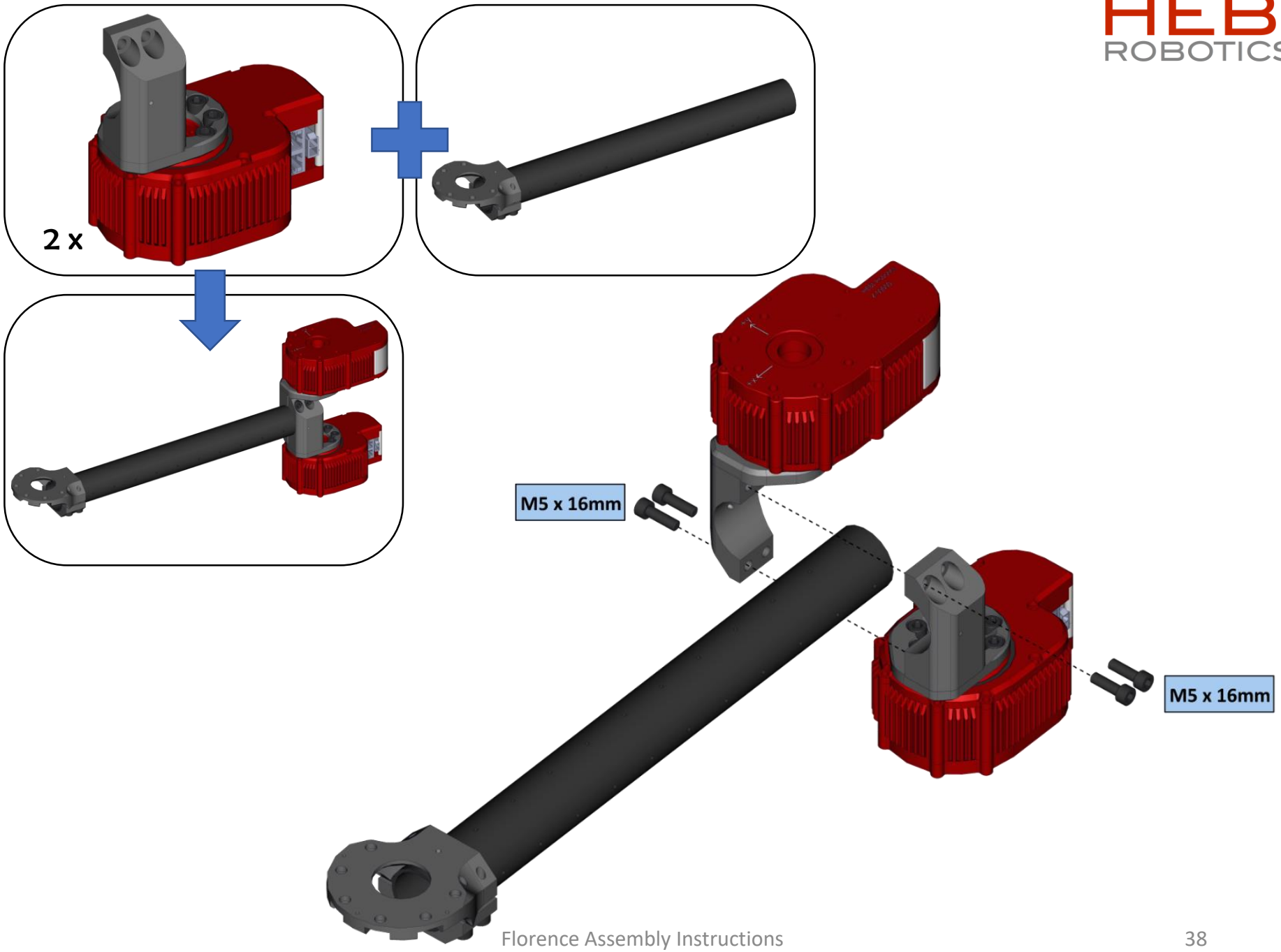
2 x
M5 x 16mm
M5 x 16mm

2 x

1 x
PP-2200-02
300mm Tube

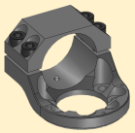

1 x
A-2038-02

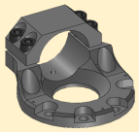

1 x
A-2039-02

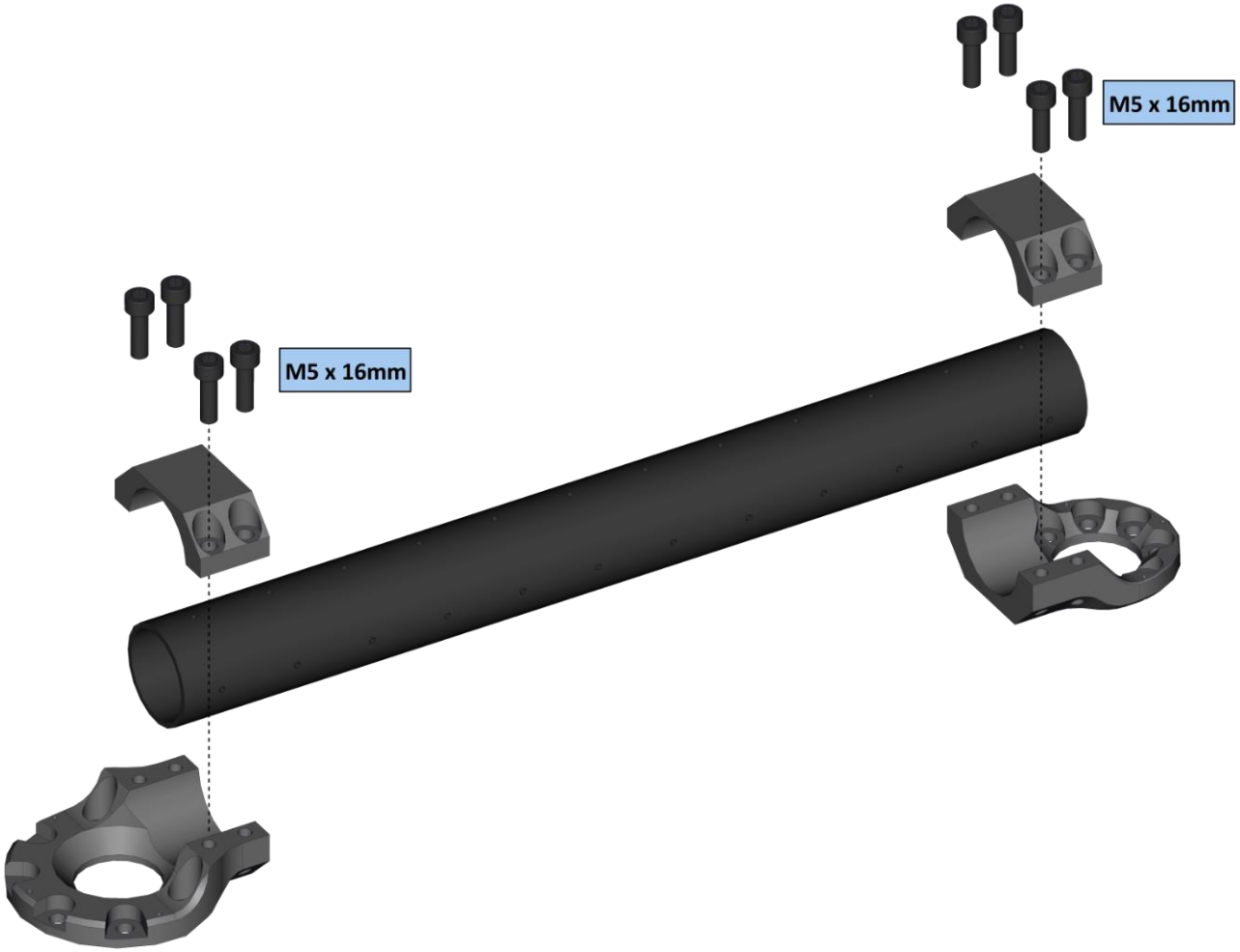

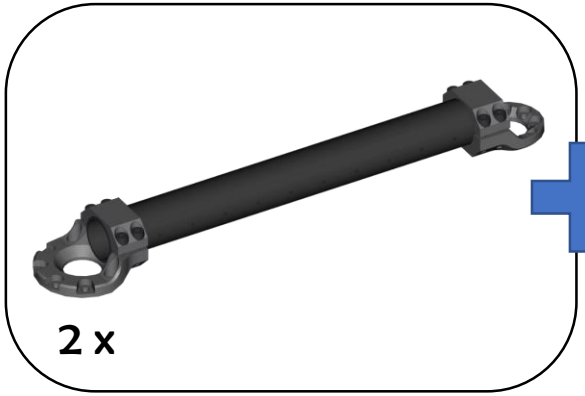

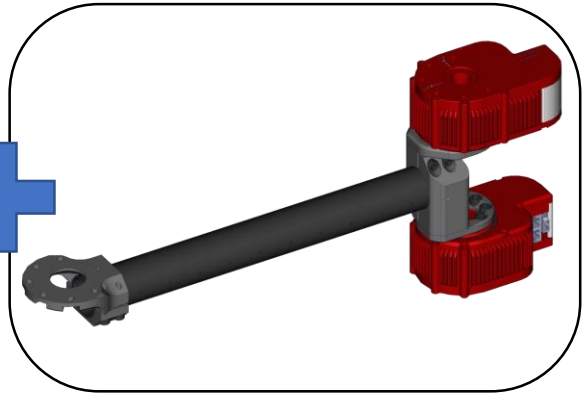

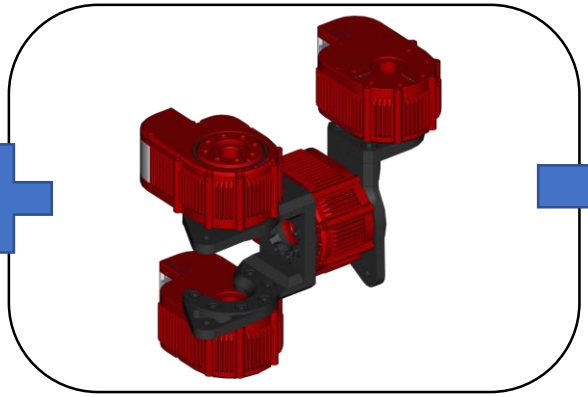

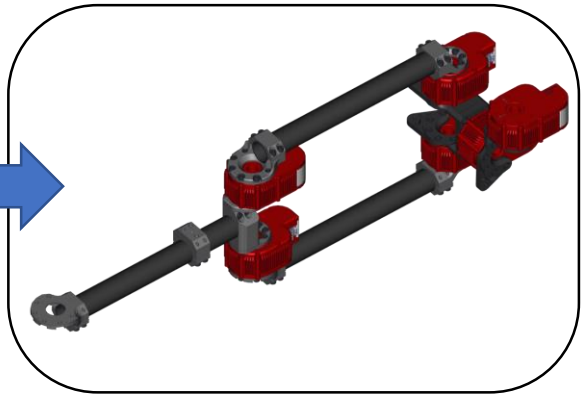

1 x

A-2070-01LR

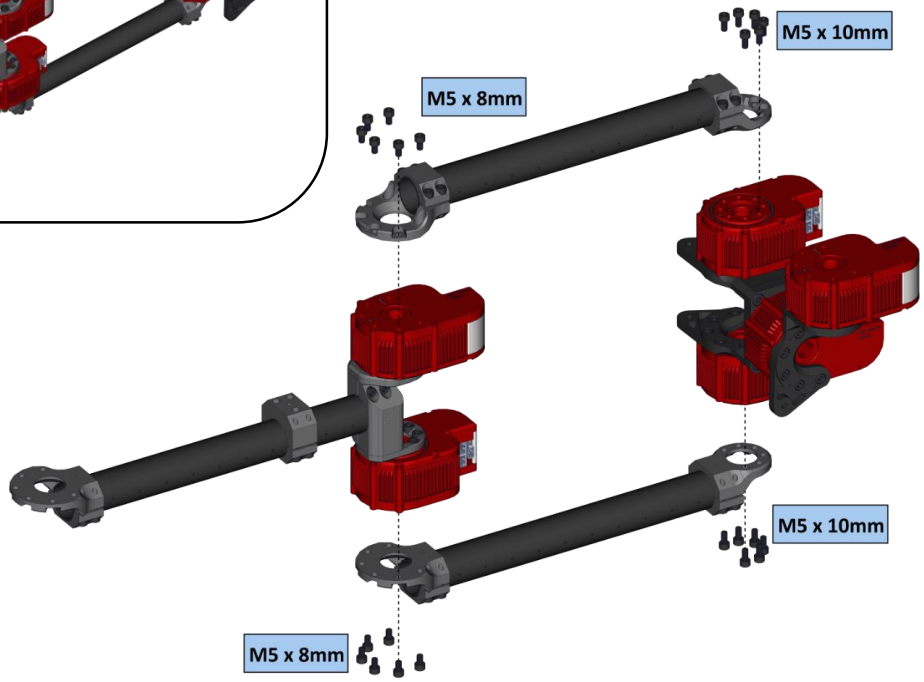

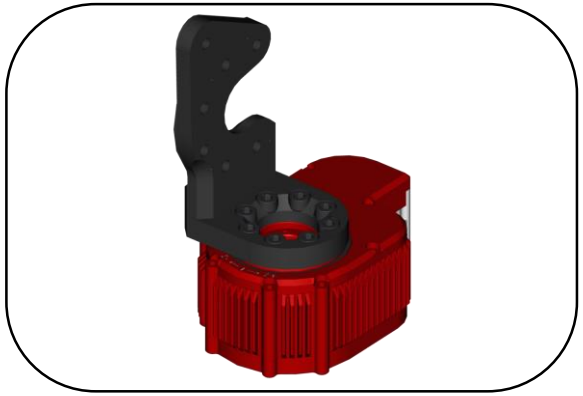

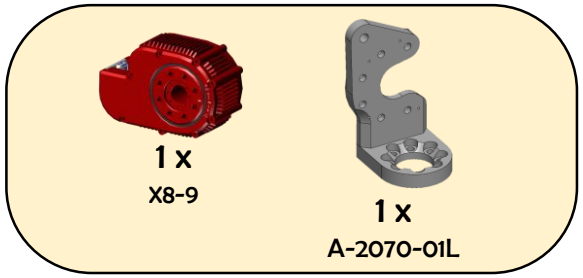
1 x
X8-9
1 x
A-2070-01L

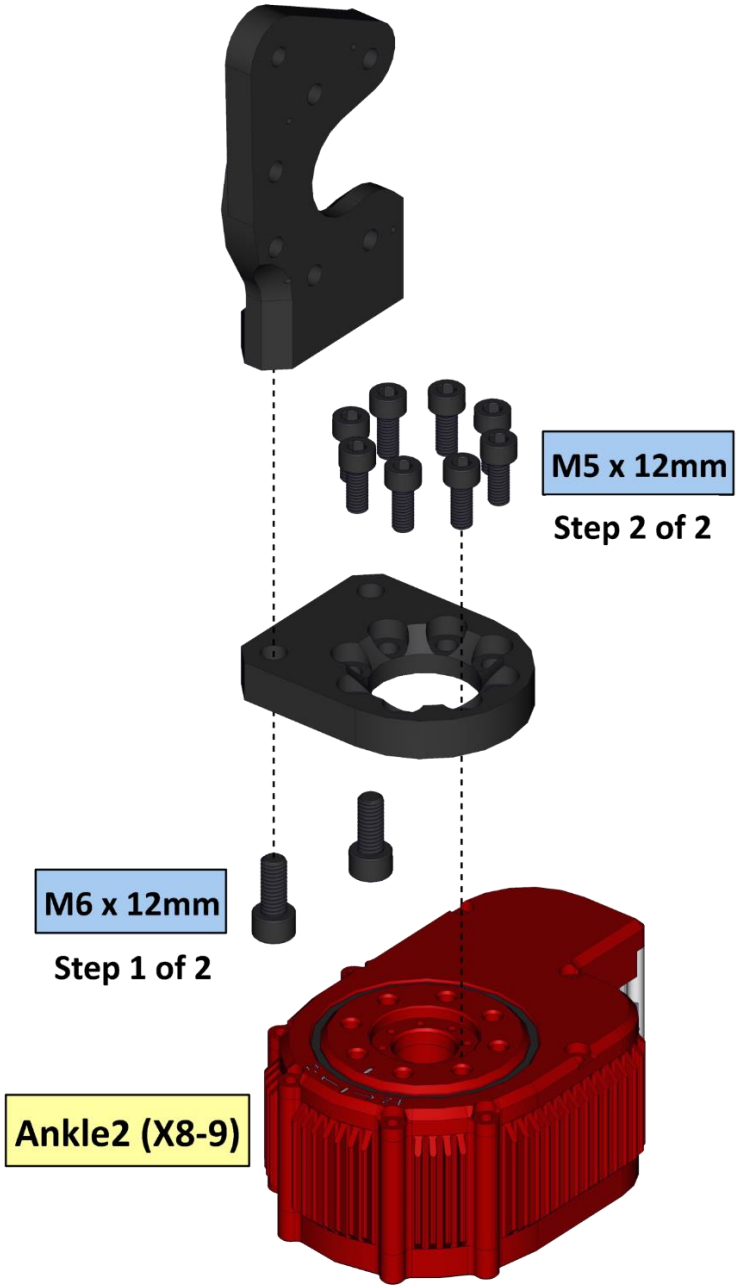
M5 x 12mm
Step 2 of 2
M6 x 12mm
Step 1 of 2
Ankle2 (X8-9)

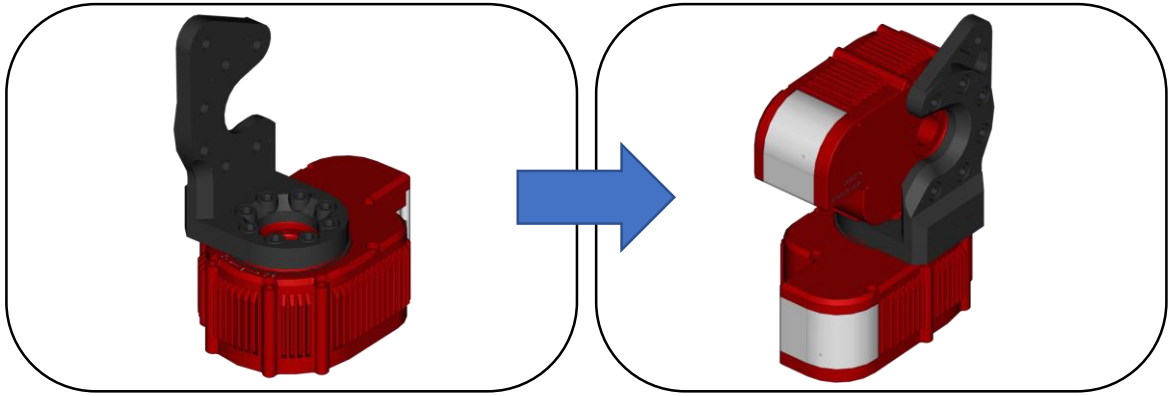

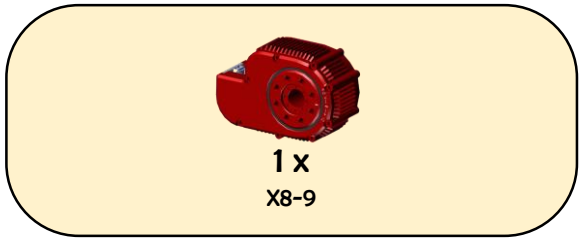
1 x
X8-9

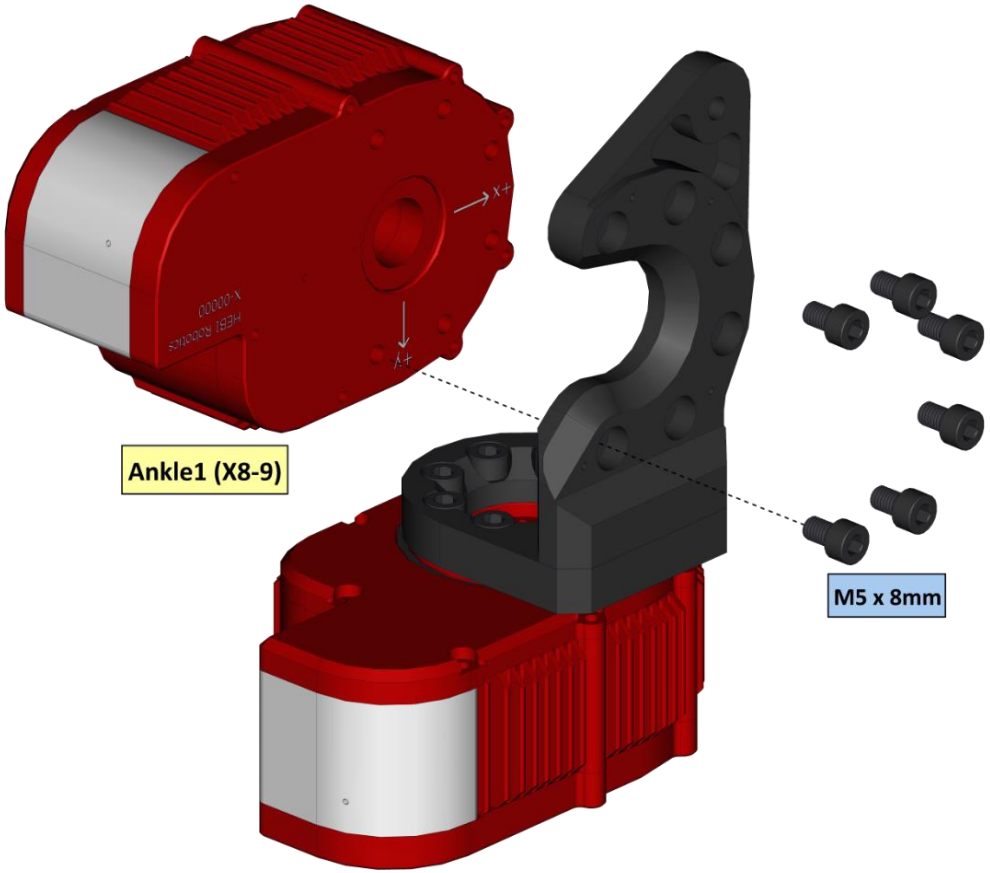
Ankle1 (X8-9)
M5 x 8mm

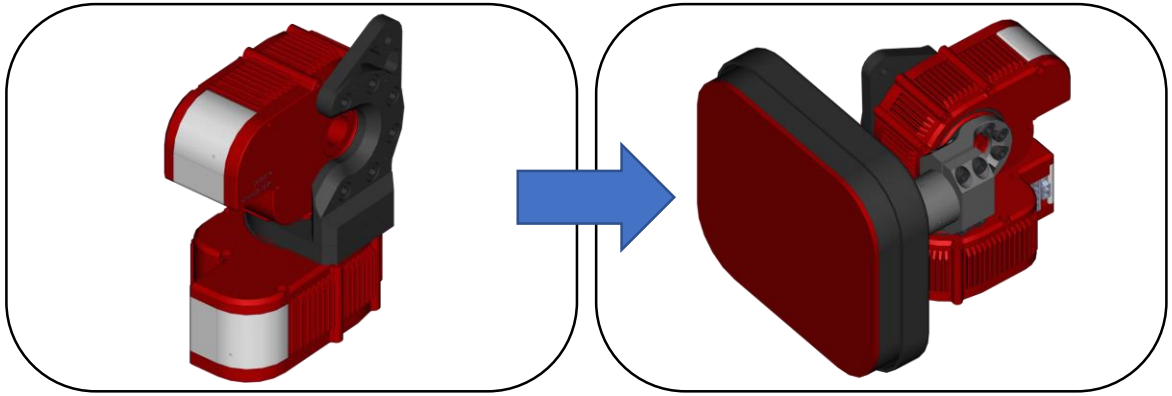

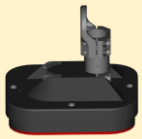

1 x
A-2211-01

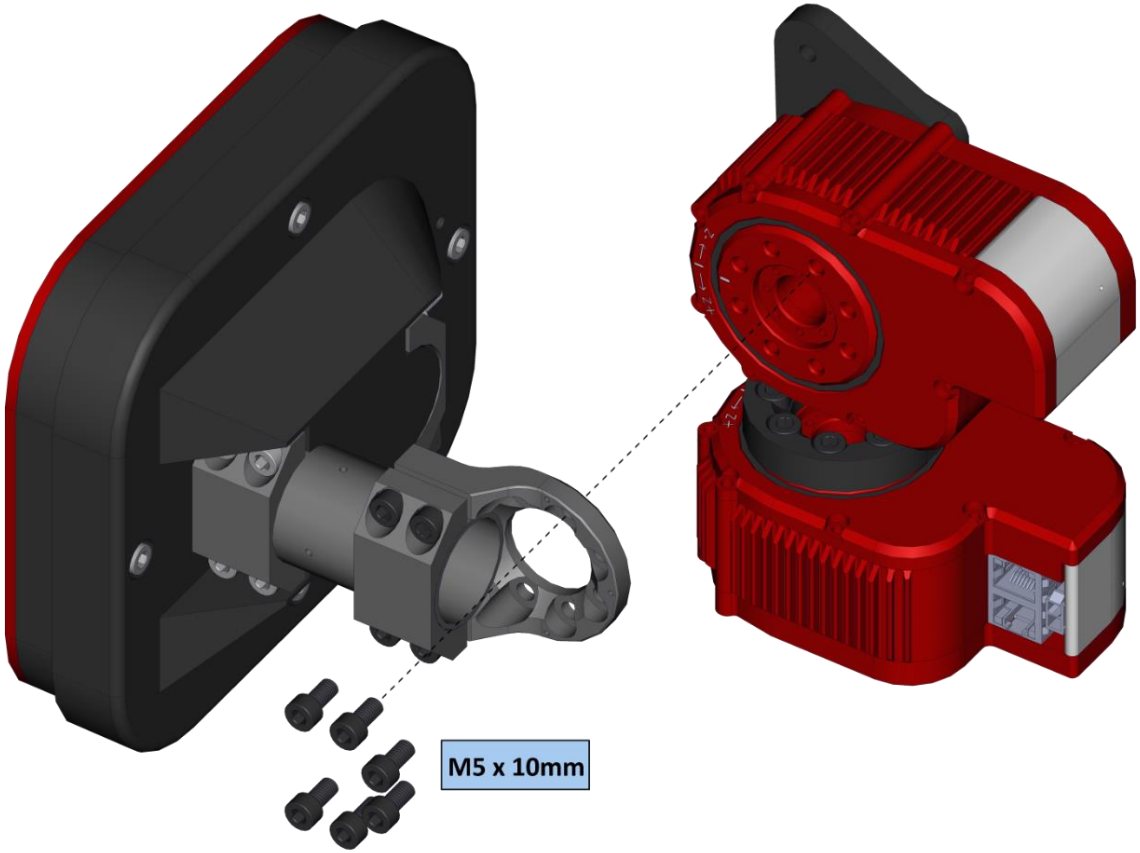

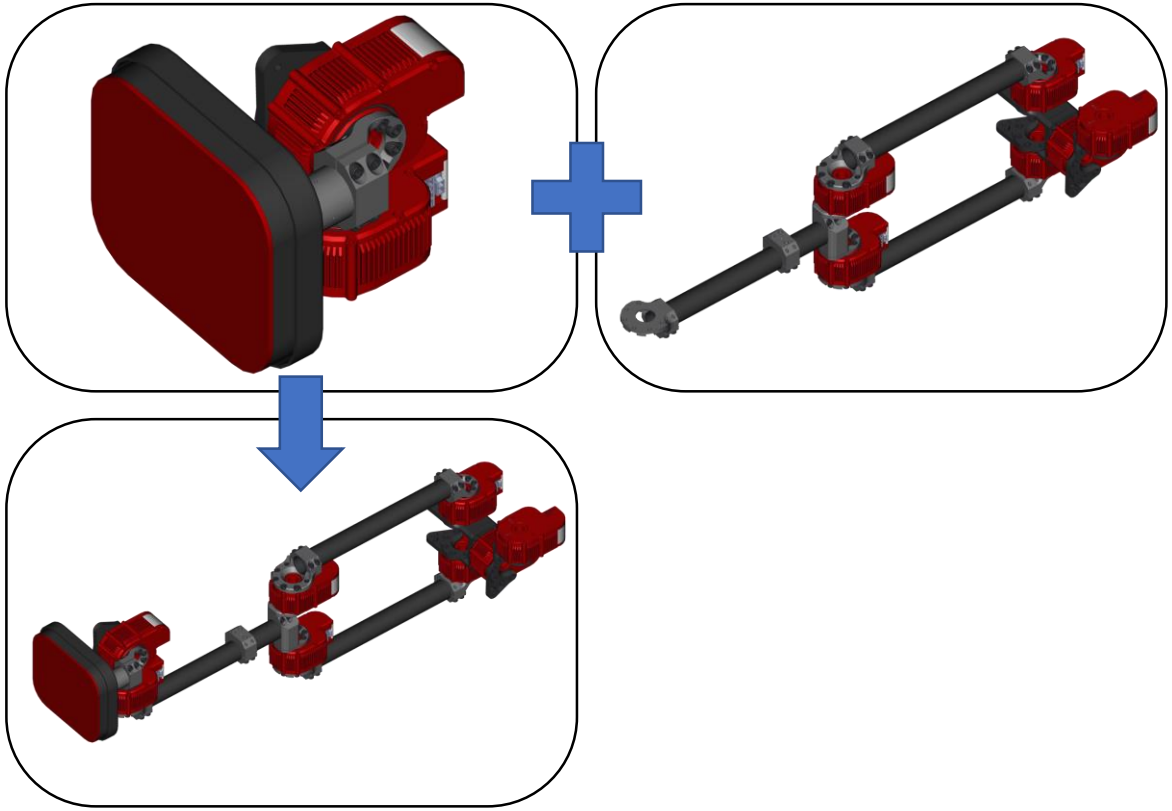

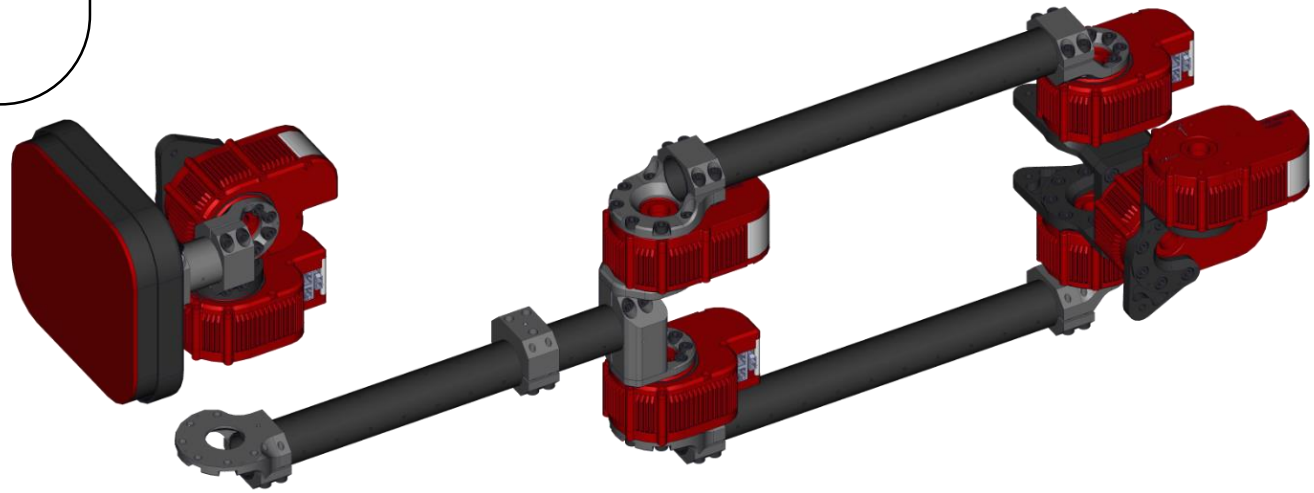

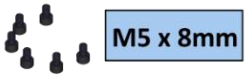

M5 x 8mm

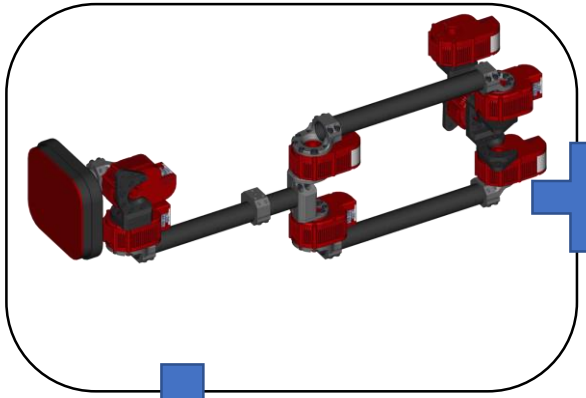

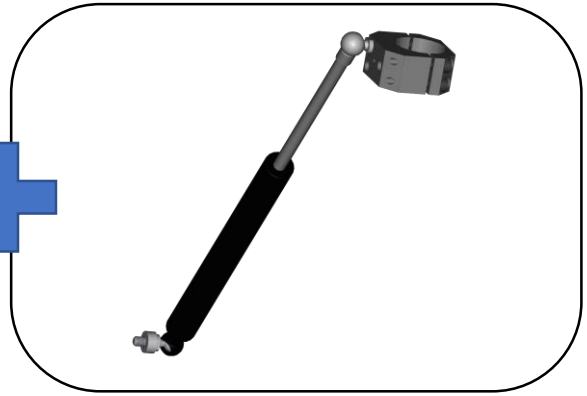

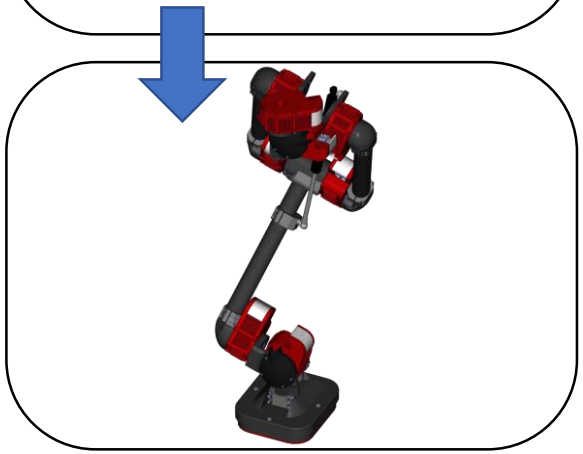

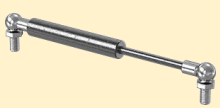

1 x
A-2088-60-20
(Gas Spring – 20lbs.)

1 x
A-2188-01

Final Assembly

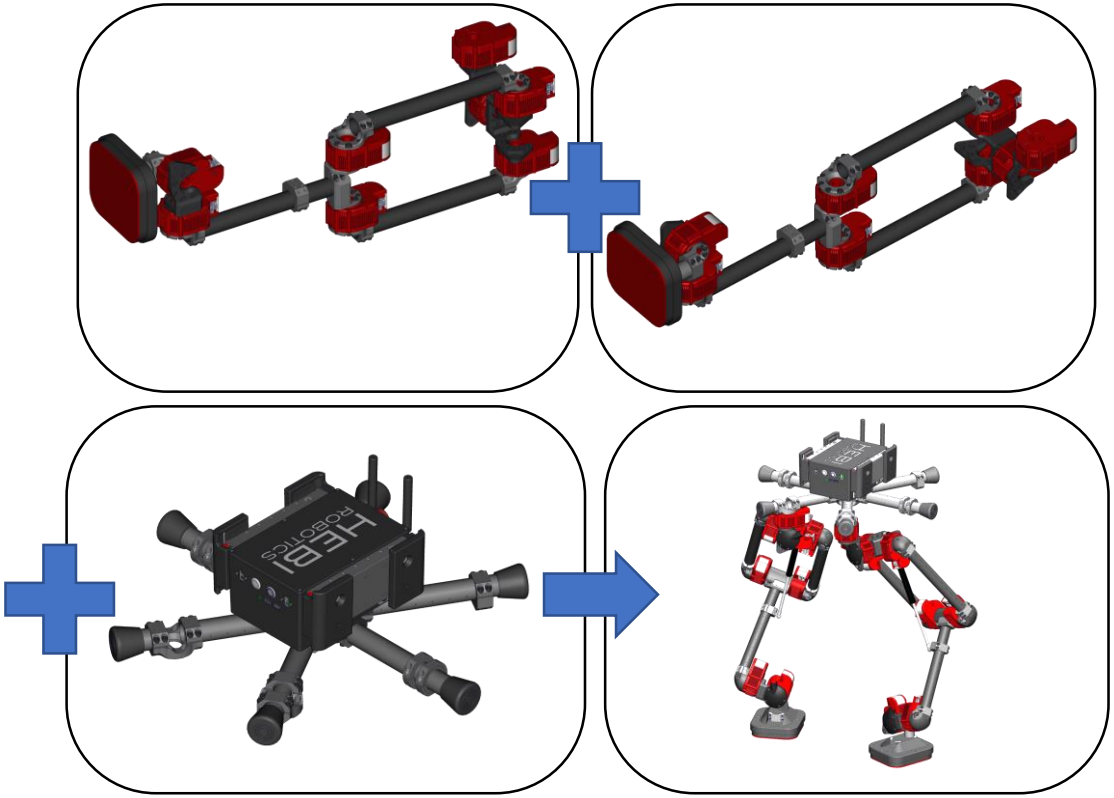

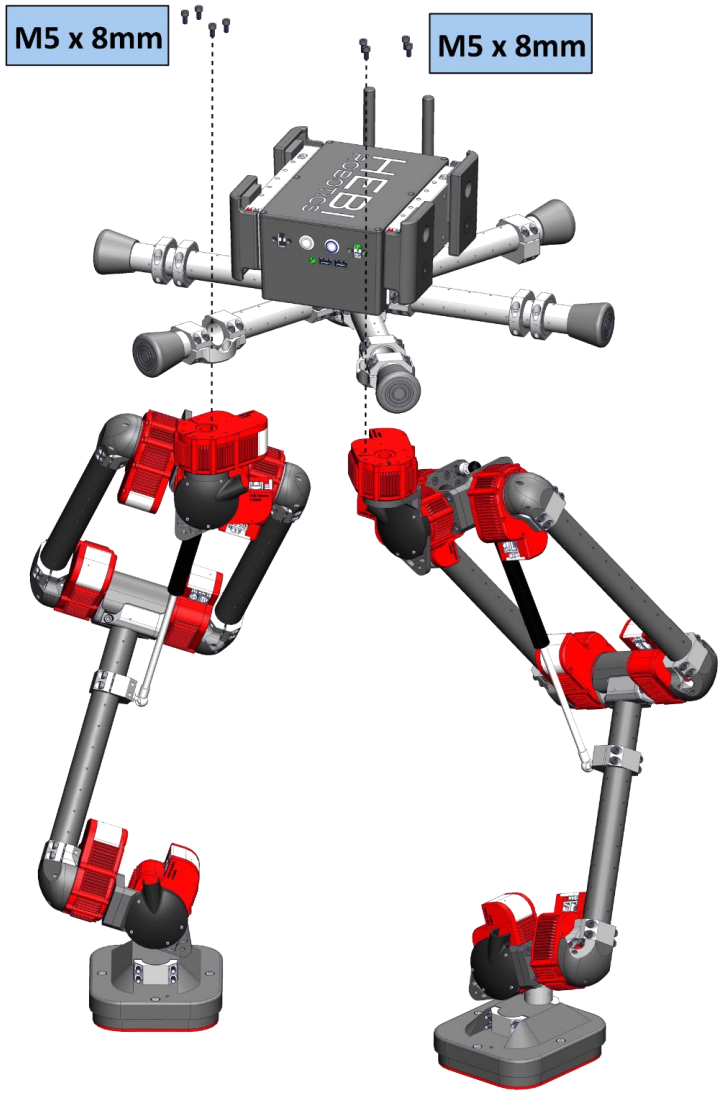
M5 x 8mm
M5 x 8mm

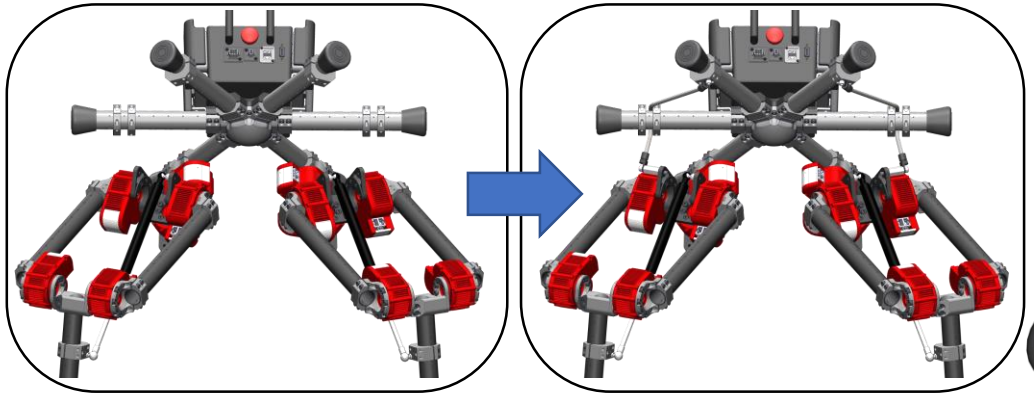

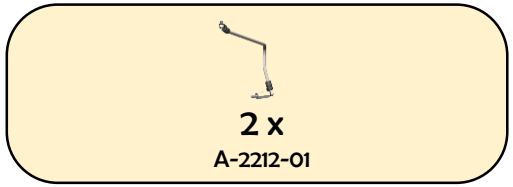
2 x
A-2212-01

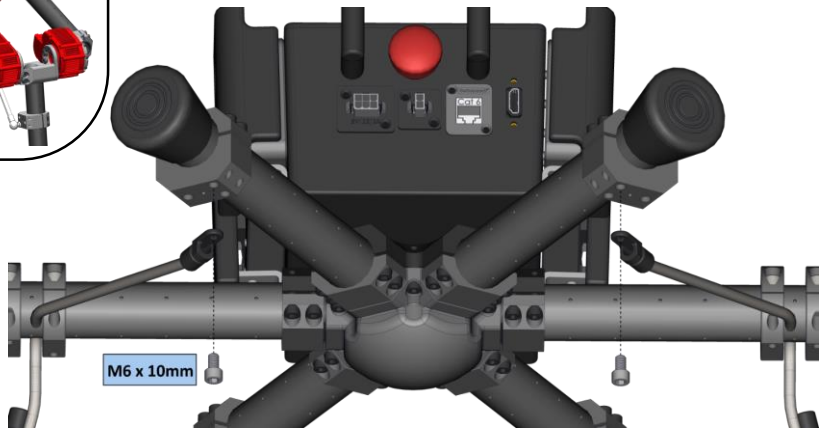
M6 x 10mm

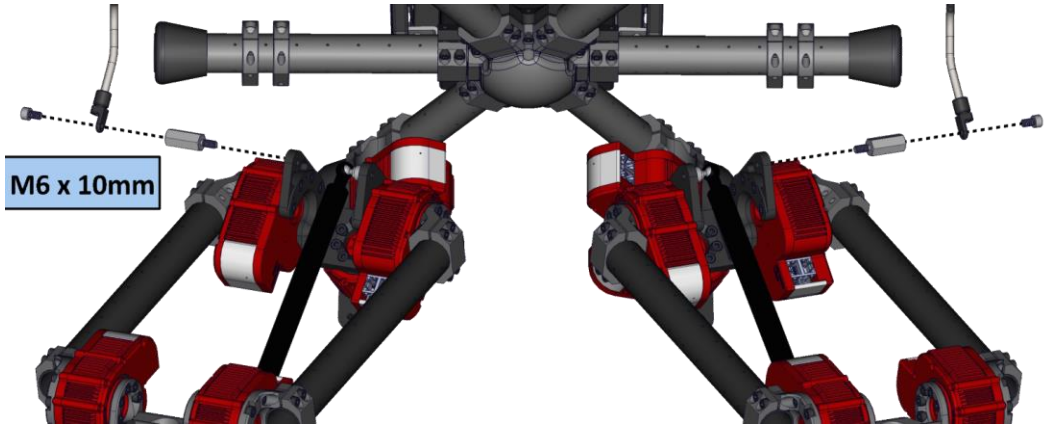
M6 x 10mm

Wiring Notes

[Spiral sleeving]

- It is best to wire each limb before moving onto the Final Assembly.
  - See the next page for a full robot wiring diagram.
- Keeping wires organized will help prevent tangling and add a nice aesthetic.
  - Spiral sleeving is a good accessory for organizing loose wires
- HEBI X-Series actuators have a thru bore specifically designed to fit ethernet and power connectors.
  - Please pass connectors thru bore hole 1 at a time.

For more information visit: ***docs.hebi.us***

Wires that come from the previous joint should be inserted directly to actuator ports.

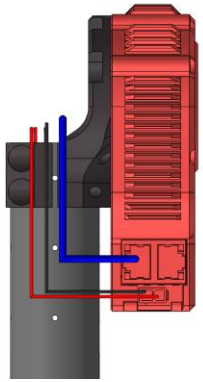

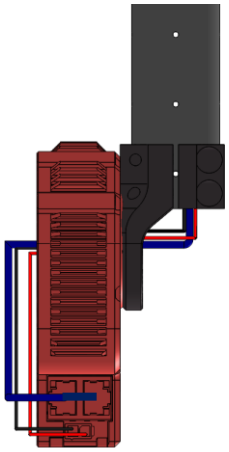

Wires that connect to the next joint should be threaded through the actuator's bore hole.

Power distribution boards are included to help daisy-chain power connections.
These fit well within the tubes between actuators.

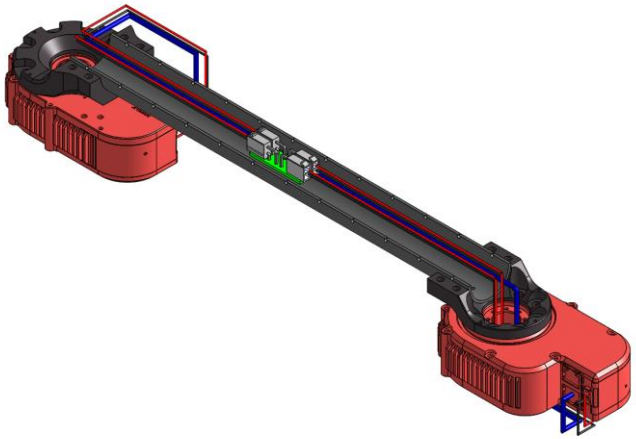

Wiring Diagram

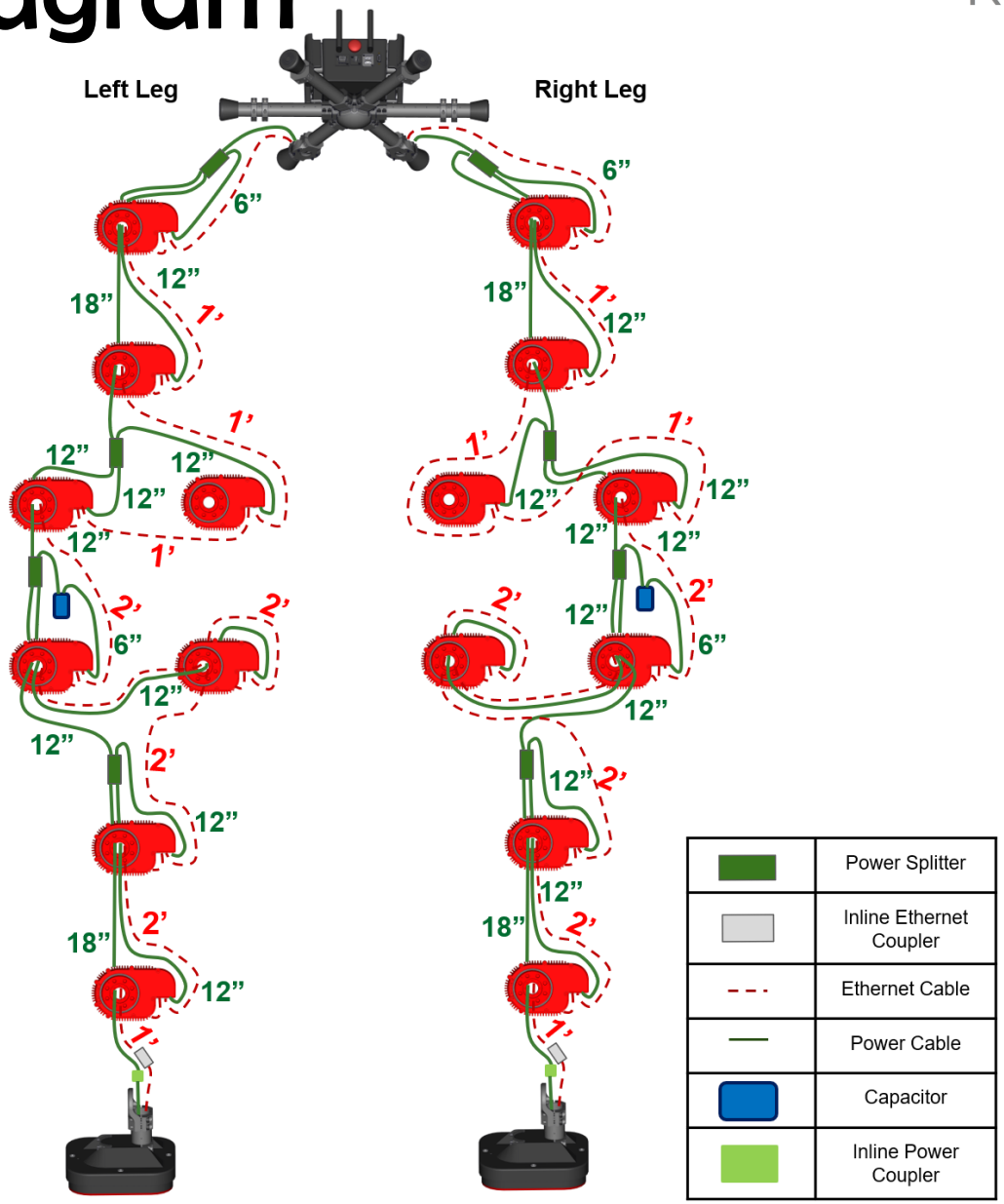

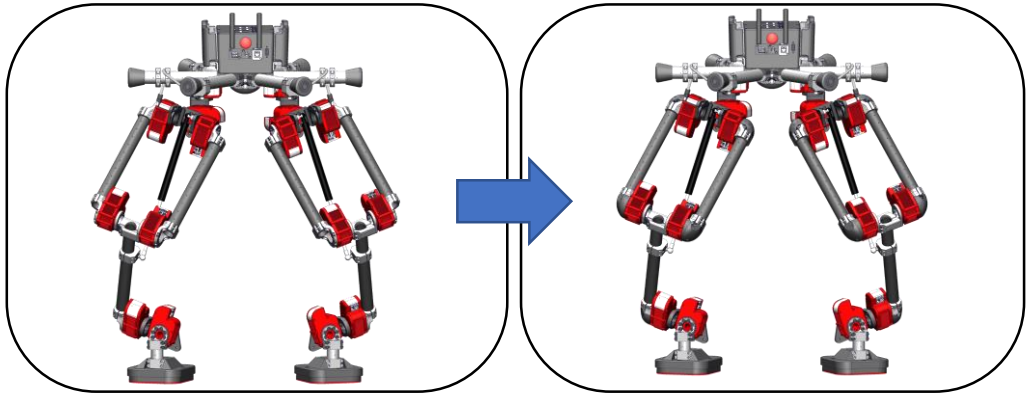

4 x
A-2090-01

6 x
A-2091-01

M2 x 8mm

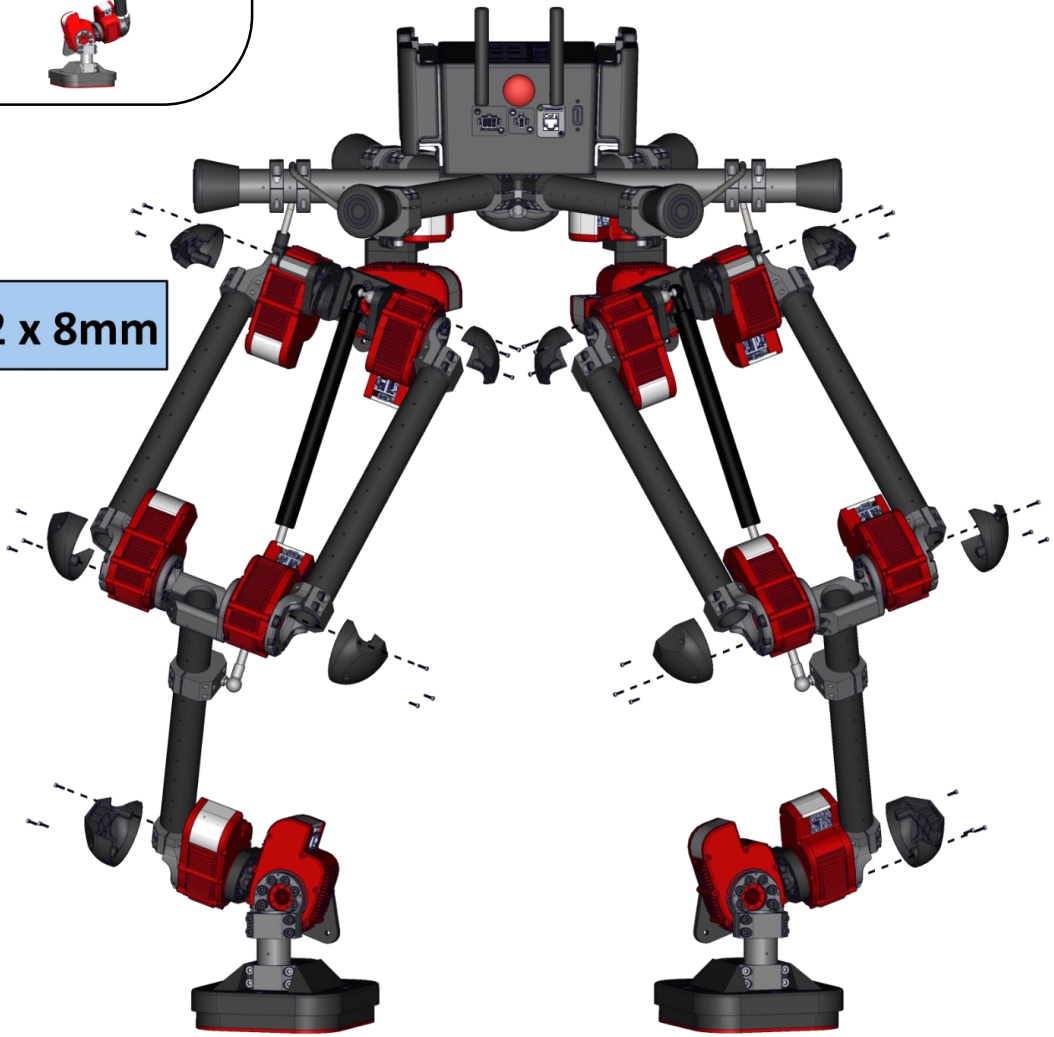

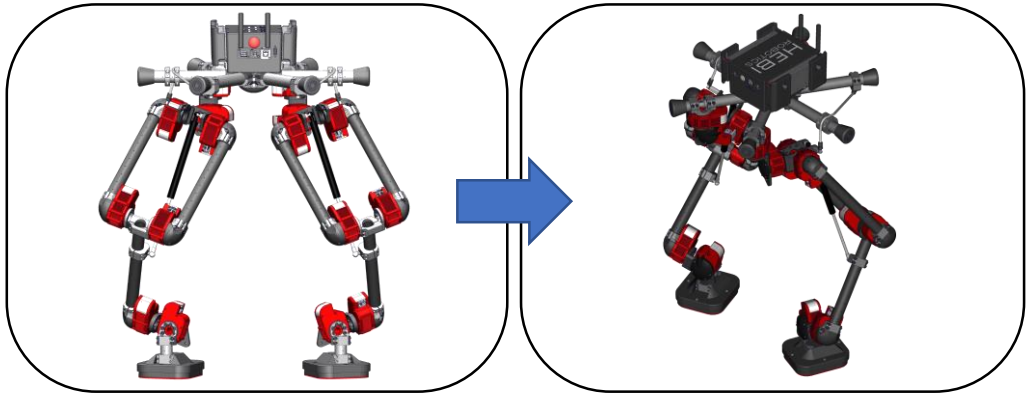

2 x
A-2090-01
2 x
PM-2493-01
2 x
A-2094-01R
2 x
A-2094-01L

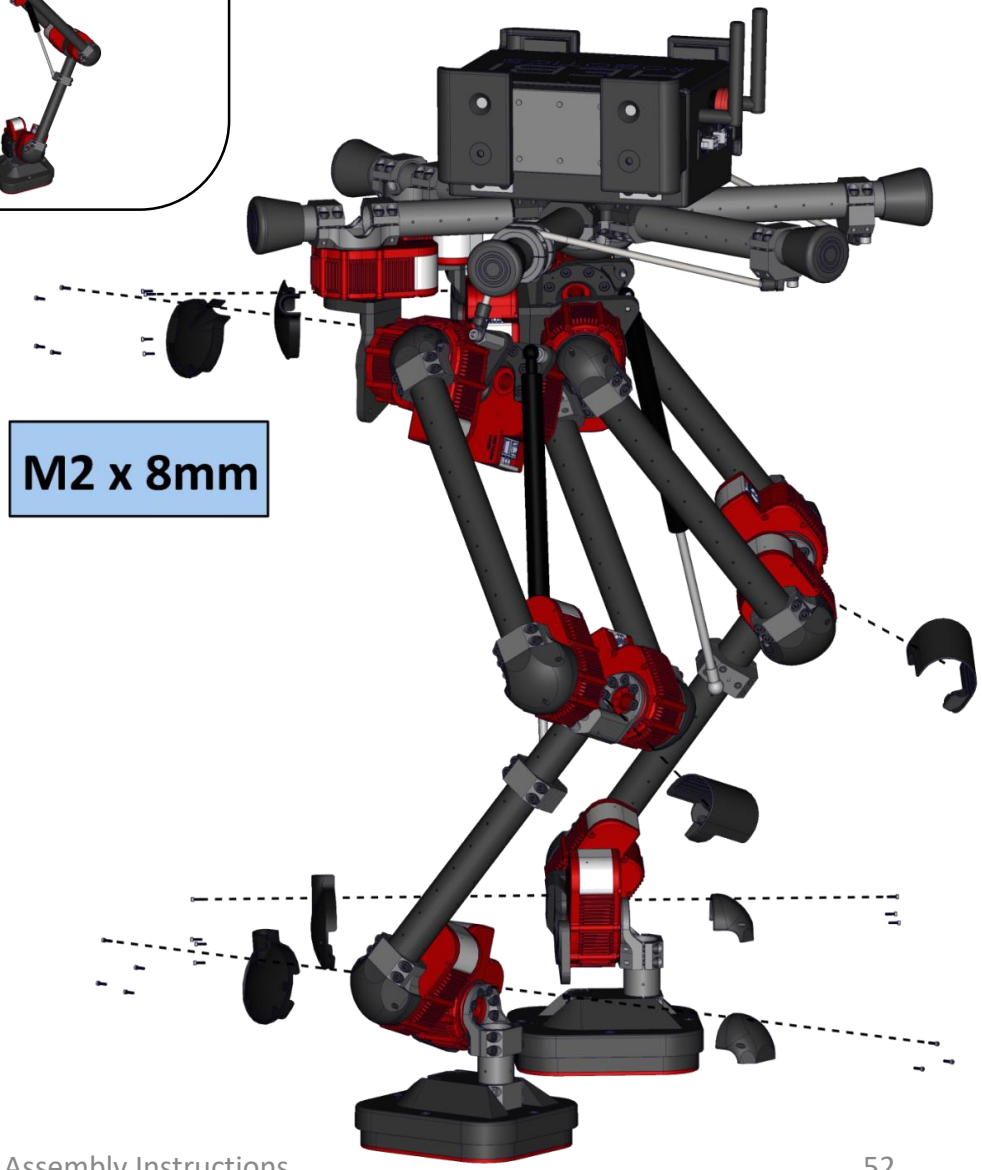
M2 x 8mm

HEBI
ROBOTICS

© HEBI Robotics 2018