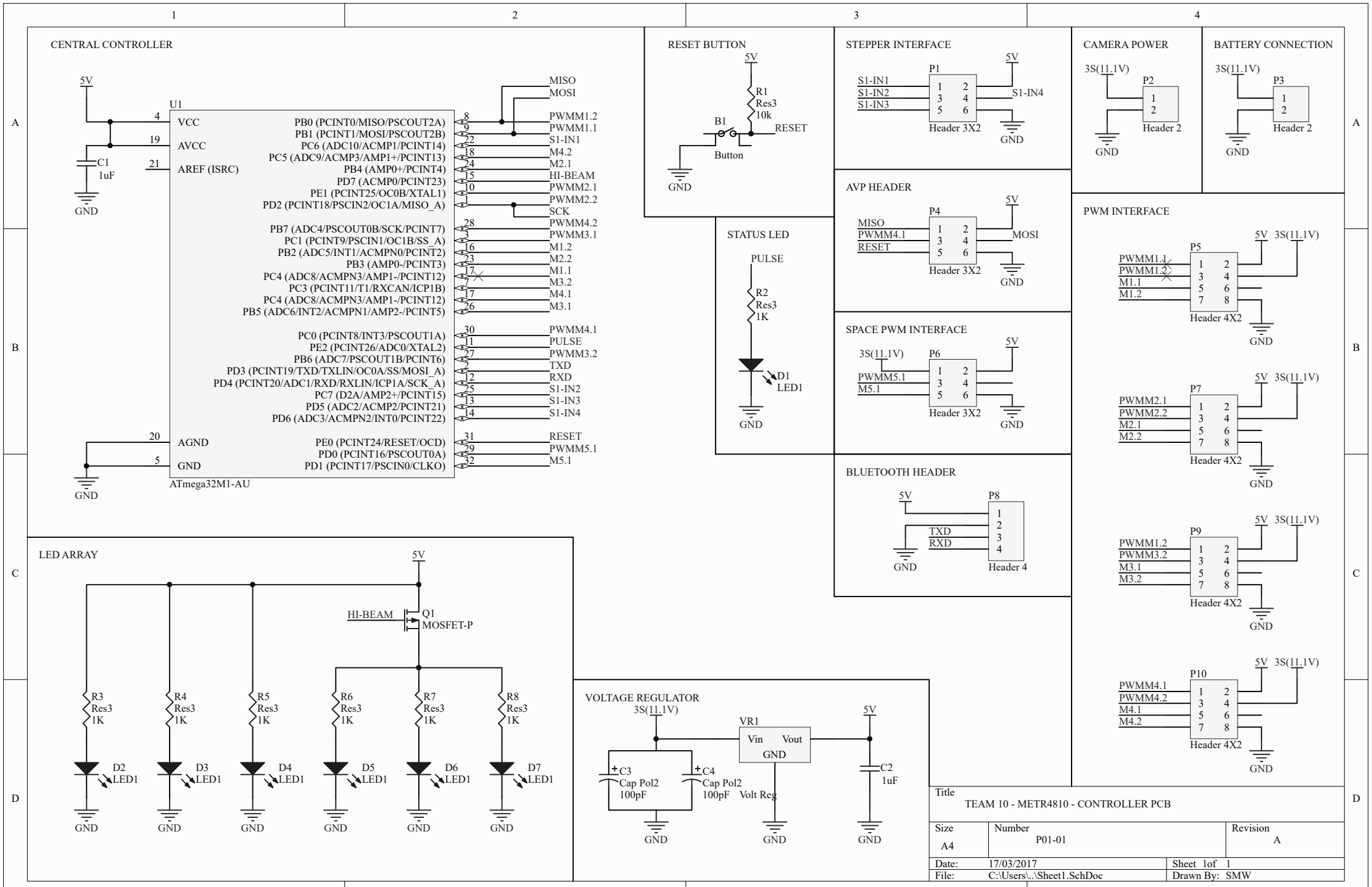
CENTRAL CONTROLLER
U1
ATmega32M1-AU
VCC
AVCC
AREF (ISRC)
AGND
GND
PB0 (PCINT0/MISO/PSCOUT2A)
PB1 (PCINT1/MOSI/PSCOUT2B)
PC6 (ADC10/ACMP1/PCINT14)
PC5 (ADC9/ACMP3/AMP1+/PCINT13)
PB4 (AMP0+/PCINT4)
PD7 (ACMP0/PCINT23)
PE1 (PCINT25/OC0B/XTAL1)
PD2 (PCINT18/PSCIN2/OC1A/MISO_A)
PB7 (ADC4/PSCOUT0B/SCK/PCINT7)
PC1 (PCINT9/PSCIN1/OC1B/SS_A)
PB2 (ADC5/INT1/ACMPN0/PCINT2)
PB3 (AMP0-/PCINT3)
PC4 (ADC8/ACMPN3/AMP1-/PCINT12)
PC3 (PCINT11/T1/RXCAN/ICP1B)
PC4 (ADC8/ACMPN3/AMP1-/PCINT12)
PB5 (ADC6/INT2/ACMPN1/AMP2-/PCINT5)
PC0 (PCINT8/INT3/PSCOUT1A)
PE2 (PCINT26/ADC0/XTAL2)
PB6 (ADC7/PSCOUT1B/PCINT6)
PD3 (PCINT19/TXD/TXLIN/OC0A/SS/MOSI_A)
PD4 (PCINT20/ADC1/RXD/RXLIN/ICP1A/SCK_A)
PC7 (D2A/AMP2+/PCINT15)
PD5 (ADC2/ACMP2/PCINT21)
PD6 (ADC3/ACMPN2/INT0/PCINT22)
PE0 (PCINT24/RESET/OCD)
PD0 (PCINT16/PSCOUT0A)
PD1 (PCINT17/PSCIN0/CLKO)
MISO
MOSI
PWMM1.2
PWMM1.1
S1-IN1
M4.2
M2.1
HI-BEAM
PWMM2.1
PWMM2.2
SCK
PWMM4.2
PWMM3.1
M1.2
M2.2
M1.1
M3.2
M4.1
M3.1
PWMM4.1
PULSE
PWMM3.2
TXD
RXD
S1-IN2
S1-IN3
S1-IN4
RESET
PWMM5.1
M5.1
C1
1uF
RESET BUTTON
R1
Res3
10k
B1
Button
STATUS LED
R2
Res3
1K
D1
LED1
STEPPER INTERFACE
P1
S1-IN1
S1-IN2
S1-IN3
S1-IN4
Header 3X2
AVP HEADER
P4
MISO
PWMM4.1
RESET
MOSI
Header 3X2
SPACE PWM INTERFACE
P6
3S(11.1V)
PWMM5.1
M5.1
Header 3X2
BLUETOOTH HEADER
P8
TXD
RXD
Header 4
CAMERA POWER
3S(11.1V)
P2
Header 2
BATTERY CONNECTION
3S(11.1V)
P3
Header 2
PWM INTERFACE
P5
PWMM1.1
PWMM1.2
M1.1
M1.2
Header 4X2
P7
PWMM2.1
PWMM2.2
M2.1
M2.2
Header 4X2
P9
PWMM1.2
PWMM3.2
M3.1
M3.2
Header 4X2
P10
PWMM4.1
PWMM4.2
M4.1
M4.2
Header 4X2
LED ARRAY
HI-BEAM
Q1
MOSFET-P
R3 Res3 1K
R4 Res3 1K
R5 Res3 1K
R6 Res3 1K
R7 Res3 1K
R8 Res3 1K
D2 LED1
D3 LED1
D4 LED1
D5 LED1
D6 LED1
D7 LED1
VOLTAGE REGULATOR
3S(11.1V)
VR1
Vin
Vout
GND
C3
Cap Pol2
100pF
C4
Cap Pol2
100pF
Volt Reg
C2
1uF
Title
TEAM 10 - METR4810 - CONTROLLER PCB
Size
A4
Number
P01-01
Revision
A
Date: 17/03/2017
Sheet 1of 1
File: C:\Users\..\Sheet1.SchDoc
Drawn By: SMW